TOP FIX TOILET SEAT INSTRUCTION

BEFORE YOU BEGIN

- This instruction shows how to fit the toilet seat. Ensure the toilet seat is the correct size in conjunction with your toilet pan.
- Unpack the product then read these instructions before proceeding. Inspect the product for damage If any damage is found, contact our Customer Service Team.

COMPONENTS LIST

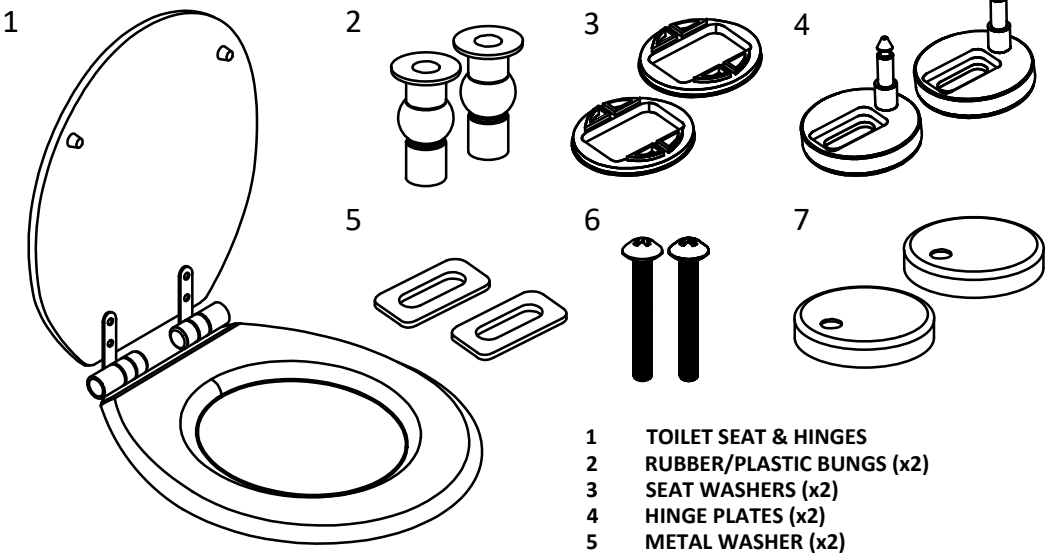

1	**TOILET SEAT & HINGES**
2	**RUBBER/PLASTIC BUNGS (x2)**
3	**SEAT WASHERS (x2)**
4	**HINGE PLATES (x2)**
5	**METAL WASHER (x2)**
6	**FIXING BOLTS (x2)**
7	**HINGE COVERS(x2)**

TOOLS REQUIRED

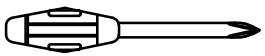

Screw Driver (Not supplied)

Note: Diagrams are for illustration purposes only. Your toilet seat may superficially differ from this drawing however the installation guide steps still apply.

CLEANING AND AFTERCARE

- **Warning:** Do not use abrasives, scourers, bleach or any type of chemical cleaning solution containing bleach when cleaning the toilet seat. It is recommended to use warm soapy water and a clean damp cloth.
- If you use bleaches and strong cleaning solution in the pan. DO NOT leave the seat closed as the fumes from the bleachers and cleaners may damage the finish on the seat.
- Tighten the bolts regularly: Check the bolts that connect the seat to the toilet pan every few months and tighten them as necessary.
- Avoid Standing on the lid or toilet seat : Standing on the seat can put unnecessary stress on the bolts and hinges and may damage the seat.

1

Insert the two rubber/plastic bungs (2) into the holes in the toilet pan.

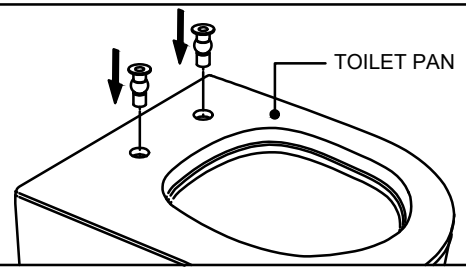

2

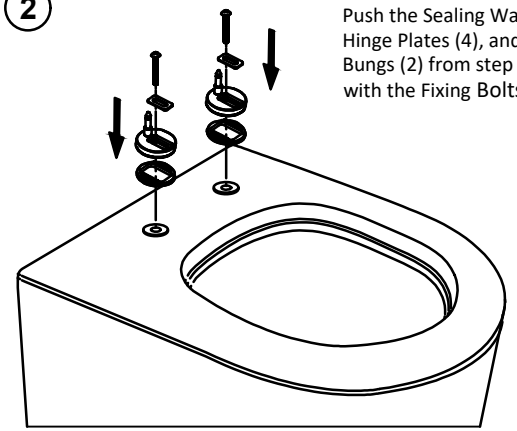

Push the Sealing Washers (3) into the recess on the underside of the Hinge Plates (4), and then rest the Hinge Plates over the Rubber/Plastic Bungs (2) from step 1, ensuring the holes are aligned, and then secure with the Fixing Bolts (6)

Once the hinge plates (4) are fixed into position using bolts (6) place the cover caps (7) over the hinge pins, then mount the toilet seat. Adjust the toilet seat to fit the pan.

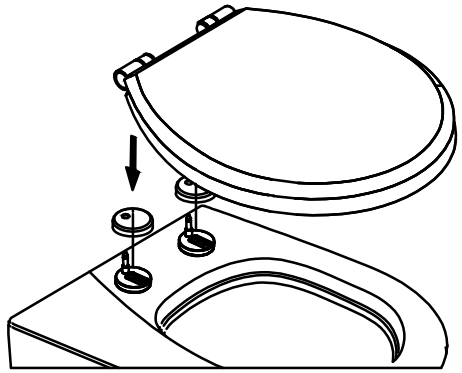

3

Without moving the hinge pins, remove the toilet seat by pressing the buttons and lifting the seat off the hinges. Tighten the bolts (5) fully to ensure a secure fit. Remount the toilet seat on the hinge pins, ensuring the toilet seat fits the pan.

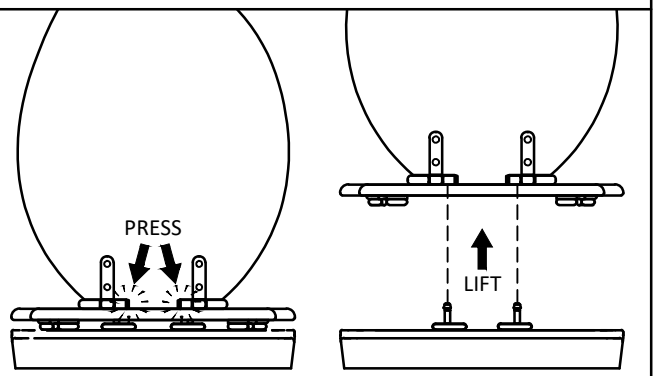

RECYCLING & DISPOSAL

Please recycle the packaging in accordance with your local government regulations on waste handling and follow the same advice at the end of the products life.