MARBLE TOP
FITTING & CARE GUIDE

PLEASE READ ALL THE INSTRUCTION FULLY BEFORE PROCEEDING.

WE HAVE TAKEN GREAT CARE TO ENSURE THAT THIS PRODUCT REACHS YOU IN GOOD CONDITION. HOWEVER SHOULD ANY PARTS BE DAMAGED OR MISSING PLEASE CONTACT YOUR LOCAL BRANCH.
WHEN FITTING, MAKE SURE TO PROTECT THE SURFACE FINISH AGAINST SCRATCHES AND MARKS THAT CAN BE CAUSED BY INSTALLATION OR ANY ROUGH SURFACES.
FIT ANY ADDITIONAL PRODUCTS SUCH AS THE WASTE AND TAPS (NOT SUPPLIED) AS PER THE MANUFACTURE'S INSTRUCTIONS.
NO REFUNDS OR REFITTING COST WILL BE GIVEN IF INCOMPLETE OR DAMAGED GOODS ARE FITTED.

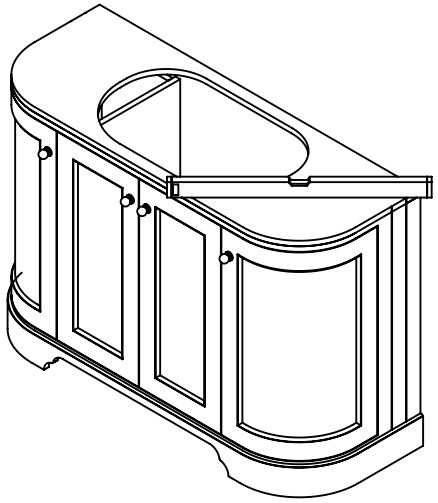

1 MAKE SURE THAT THE CABINET IS LEVEL AND FLUSH BEFORE PROCEEDING WITH ANY INSTALLATION.

IF ANY FURTHER WORK AROUND THE PRODUCT NEEDS TO BE CARRIED OUT, SUCH AS TILING OR FITTING OF A MIRROR, PROTECT SURFACES WITH A COVER OR AN OLD BLANKET.

2 ENSURE ALL SURFACES THAT ARE GOING TO COME INTO CONTACT WITH THE SILICONE ARE CLEAN AND DIRT FREE.

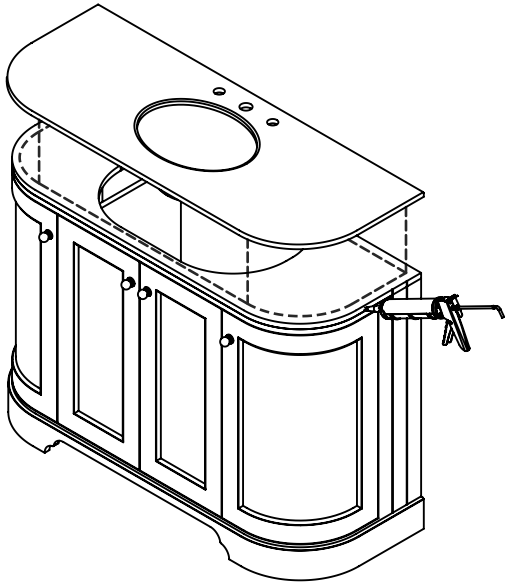

3 RUN A SMALL BEAD OF SILICONE AROUND THE TOP EDGES OF THE CABINET WHERE THE TOP & BASIN SITS. YOU MAY ALSO WANT TO APPLY SOME EXTRA SILICONE OVER THE CABINET'S TOP.

CAREFULLY PLACE THE TOP & BASIN ONTO THE CABINET ENSURING ALIGNMENT IS CORRECT.

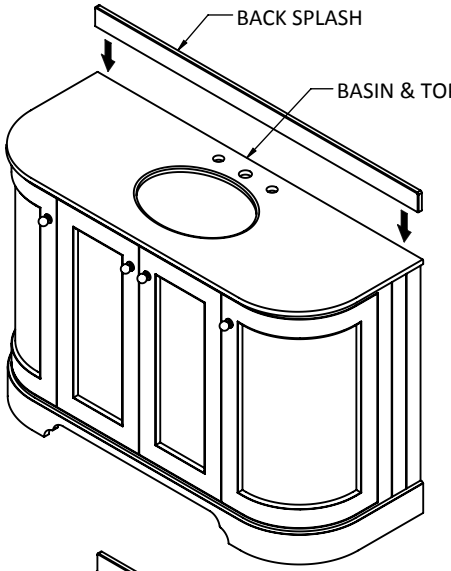

4 IF YOUR BACK SPLASH IS LOOSE, PLACE THE BASIN AND TOP INTO POSITION ON THE CABINET ENSURING LEVEL AND SQUARE.

RUN A BEAD OF SILICONE ALONG THE UNDER SIDE OF THE BACK SPLASH AND GENTLY POSITION AS REQUIRED.

CLEAN ANY EXCESS SILICONE USING A SOFT DAMP CLOTH AND COMMON DETERGENT.

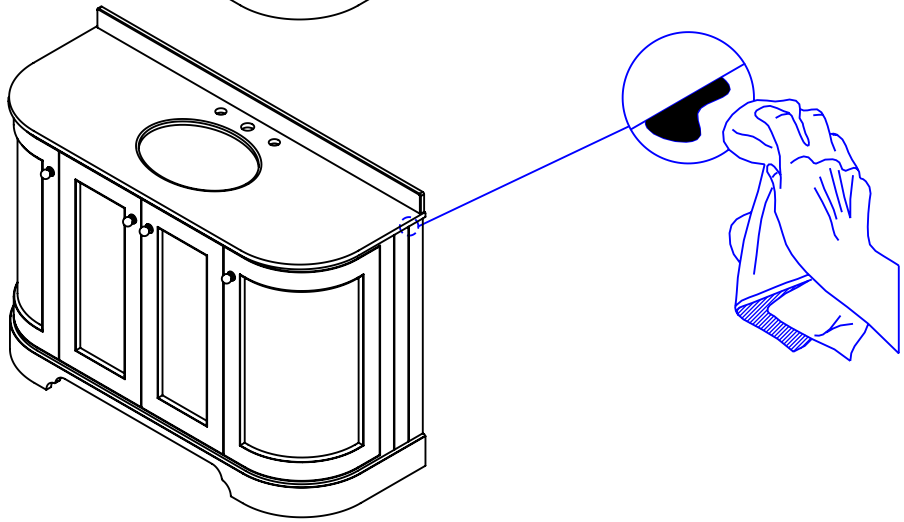

5 ANY EXCESS SILICONE SHOULD BE CLEANED USING A SOFT DAMP CLOTH WITH COMMON DETERGENT.

DO NOT USE AN ABRASIVE AGENT.

ALLOW 24 HOURS FOR SILICONE TO CURE BEFORE USE.

CARE & MAINTENANCE
WE RECOMMEND THAT THE MARBLE TOPS ARE RE-SEALED APPROX. EVERY 6-12 MONTHS.
APPLICATION OF ANY SEALER SHOULD BE IN ACCORDANCE WITH THE MANUFACTURER'S INSTRUCTION.

CLEAN THE PRODUCT WITH WARM SOAPY WATER OR A VERY MILD DETERGENT.
DO NOT USE DETERGENTS OR ABRASIVE CLEANERS.
SMALL MARKS AND MINOR SCRATCHES CAN BE BUFFED OUT USING A FINE T-CUT COMPOUND.
DO NOT POUR BOILING WATER OR STAND VERY HOT OBJECTS ON THE SURFACE AS THIS CAN DAMAGE THE FINISH.