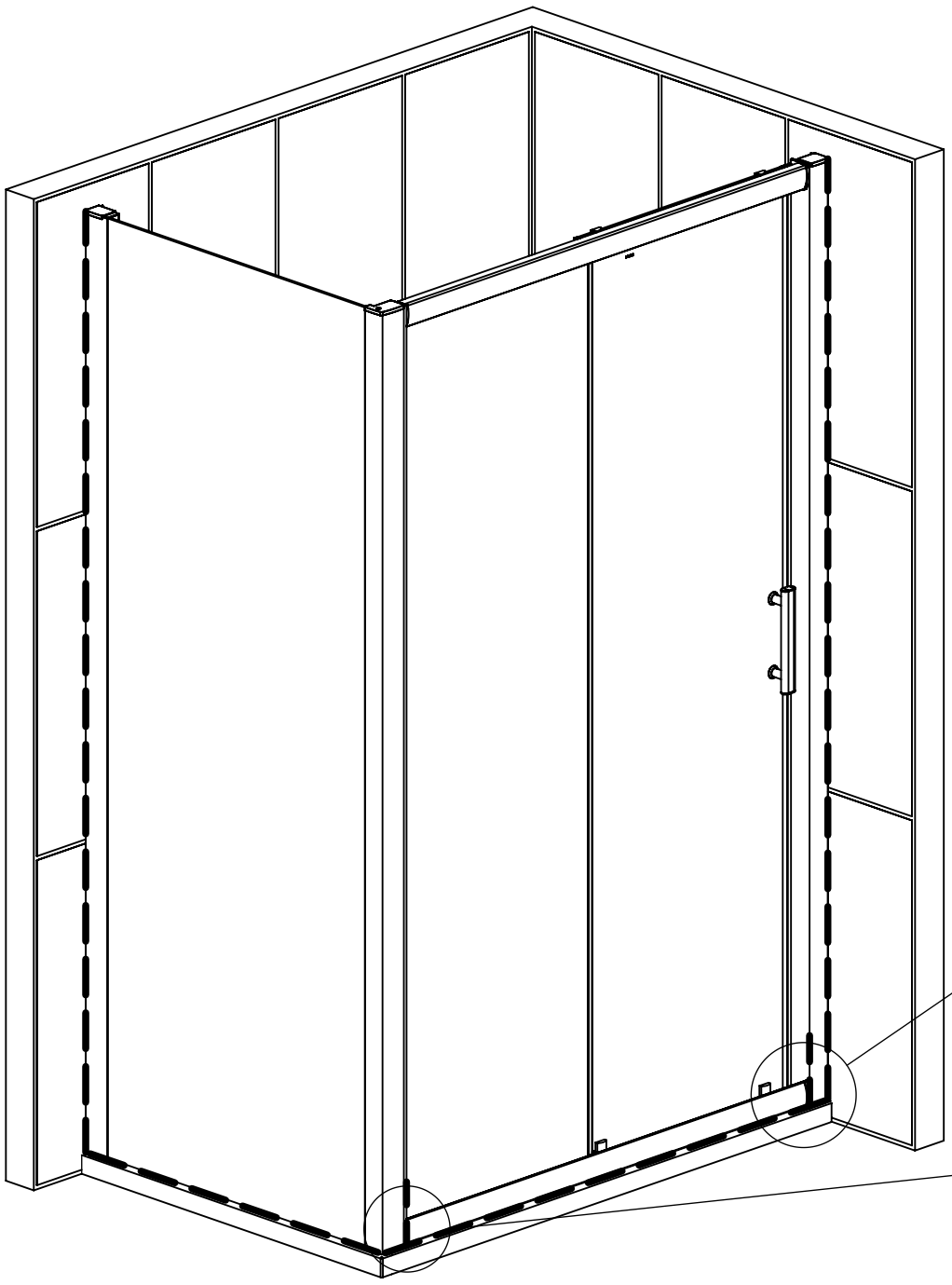

EXTERNALLY SILICONE SEAL THE WALL PROFILES WHERE THEY MEET THE WALL AND THE BOTTOM PROFILE AND GLASS SIDE PANEL WHERE IT MEETS THE TRAY. ALL IN A CONTINUOUS BEAD.

ALSO SILICONE PLASTIC MOULDING AND 150mm HIGH AS SHOWN IN DETAILED VIEWS BELOW.

DO NOT SILICONE INSIDE THE ENCLOSURE

ALLOW THE SILICONE AT LEAST 24 HOURS TO FULLY CURE

AFTERCARE - ENSURE YOU CLEAN YOUR PRODUCT USING A MILD DETERGENT DILUTED IN WATER, REMOVING AND RESIDUE WITH A SOFT DAMP CLOTH.
MAINTENANCE - ENSURE MOVING PARTS ARE FREE FROM ANY DEBRIS OR SOAP BUILD UP.

TROUBLE SHOOTING GUIDE - SEE ENCLOSURE INSTRUCTION

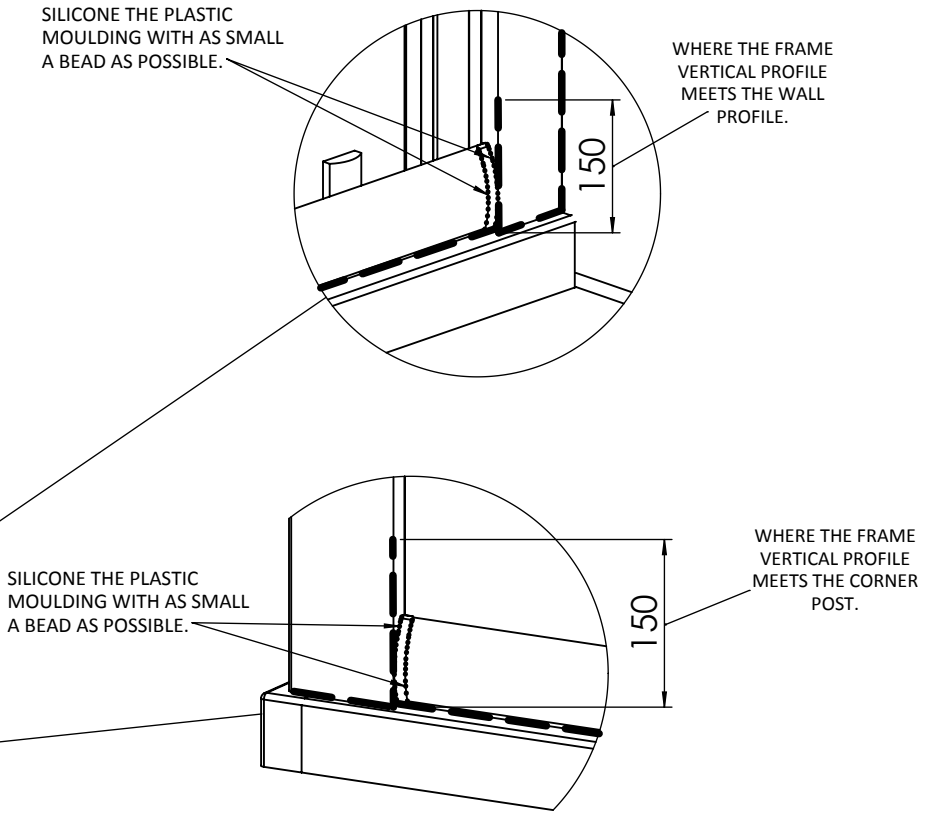

SIDE PANEL FITTING INSTRUCTION

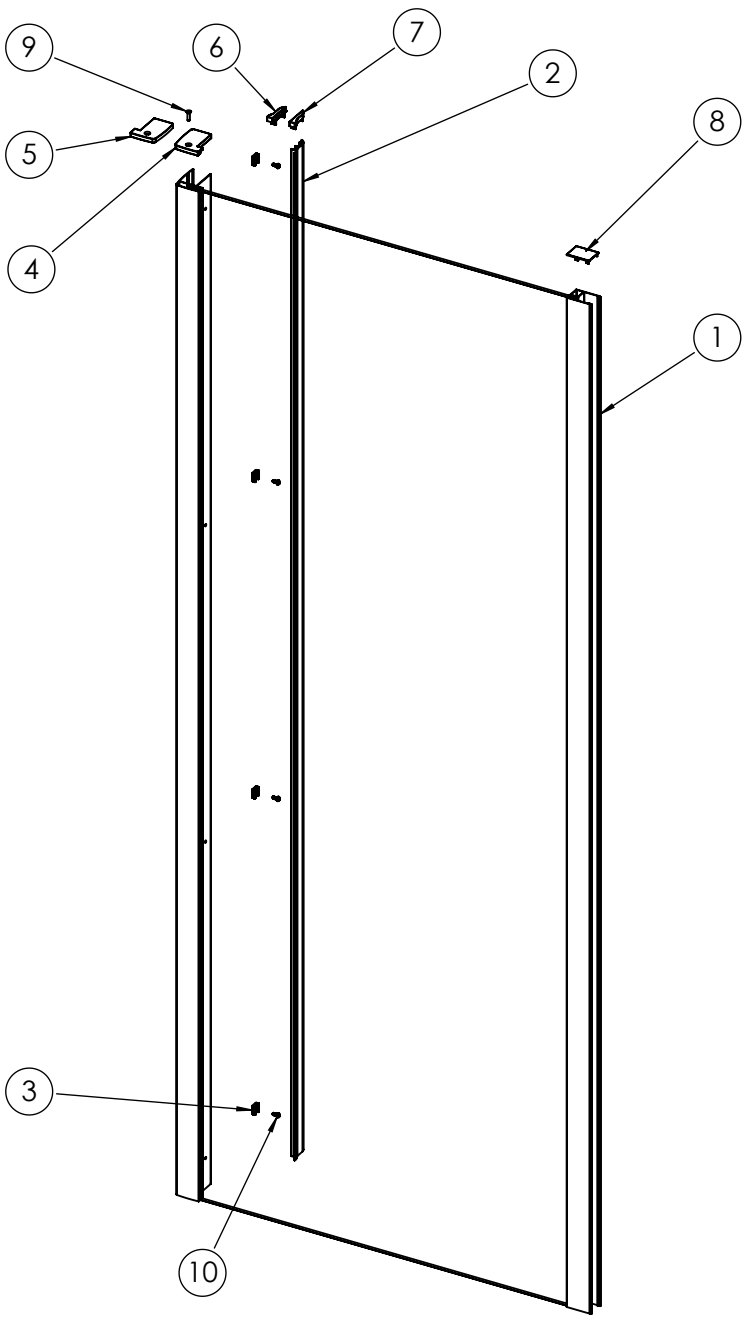

UNPACK THE BOX AND ENSURE ALL COMPONENTS ARE PRESENT.

NO REFUNDS OR REFITTING COST WILL BE GIVEN IF INCOMPLETE OR DAMAGED GOODS ARE FITTED.

THE TOUGHENED SAFETY GLASS SHOULD BE HANDLED WITH CARE AS IMPACTS WILL DAMAGE THE GLASS OR ENCLOSURE.

FIT THE SHOWER TRAY AS PER THE MANUFACTURERS INSTRUCTIONS.

NOTE: IF THE TRAY ISN'T TRUE AND LEVEL, IT MUST BE RECTIFIED BEFORE SILICONING AROUND THE TOP EDGE OF THE TRAY WHERE IT MEETS THE TILES. ALLOW THE SILICONE TO DRY BEFORE FITTING THE ENCLOSURE.

THE ENCLOSURE INSTALLATION IS RECOMMENDED AS A TWO MAN OPERATION.

TOOLS REQUIRED

POWER DRILL - 3mm DRILL BIT - 6mm MASONARY DRILL BIT
CROSS HEAD SCREW DRIVER - TAPE MEASURE - PENCIL
SILICONE GUN WITH SANITARY GRADE SEALANT - SPIRIT LEVEL
RUBBER HEAD MALLET

ITEM	DESCRIPTION	Notes	QTY
1	SIDE PANEL SUB ASSEMBLY		1
2	SCREW COVER PROFILE	OPTIONAL ON SOME MODELS	1
3	SCREW COVER PROFILE FIXING CLIPS	OPTIONAL ON SOME MODELS	4
4	CORNER POST TOP CAP LH		1
5	CORNER POST TOP CAP RH		1
6	SCREW COVER PROFILE CAP LH	OPTIONAL ON SOME MODELS	1
7	SCREW COVER PROFILE CAP RH	OPTIONAL ON SOME MODELS	1
8	RECTANGULAR CAP		1
9	M4 X 10 SOC HEAD C/SK SCREW		1
10	SCREW DIA 3.9mm x 10mm PAN HEAD	SMALL HEAD FOR USE WITH ITEMS 11 & 12.	4
11	SCREW CUP (NOT SHOWN)	ONLY USED WHEN NO ITEM 2 & 3	4
12	SCREW CHROME CAP (NOT SHOWN)	ONLY USED WHEN NO ITEM 2 & 3	4

1

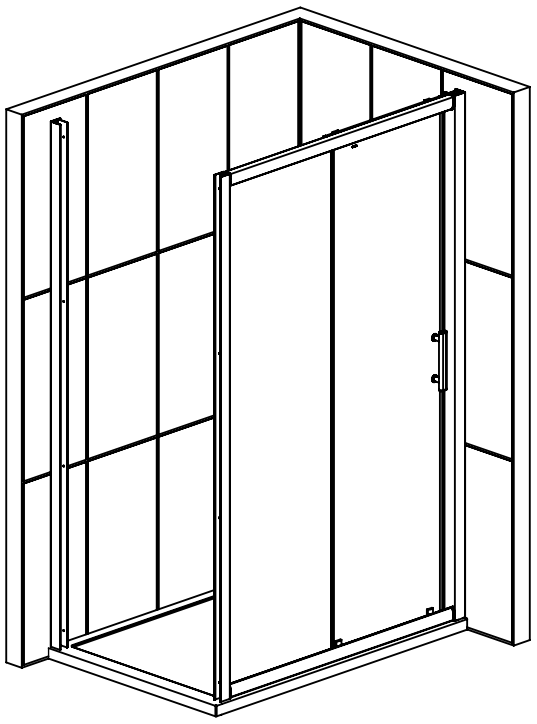

THE SIDE PANEL IS AN ADDITIONAL ITEM TO THE ENCLOSURE / DOOR.

FOLLOW THE FIRST STEPS OF THE ENCLOSURE / DOOR FITTING INSTRUCTION UPTO THE STEP WHERE YOU CHOOSE BETWEEN ALCOVE OR SIDE PANEL FIT **

NOTE A
THE ENCLOSURE IS DESIGNED TO SIT BACK 10-12mm FROM THE FRONT EDGE OF THE TRAY. HOWEVER, OFFER THE FRAME ONTO THE TRAY FIRST. ENSURE WALL PROFILES WILL REACH BOTH WALLS USING 10mm AS A MINIMUM GUIDE.

IN A TYPICAL INSTALLATION
NOW FIT AND SECURE THE REMAINING WALL PROFILE TO THE BACK WALL. IT SHOULD BE APPROXIMATELY 10mm IN FROM THE TRAY EDGE (SEE ENLARGED VIEW OPPOSITE). IT SHOULD ALSO BE LEVEL AND TRUE. USE A SPIRIT LEVEL. USE RAWL PLUGS AND SCREWS PROVIDED WITH ENCLOSURE / DOOR TO SECURE.

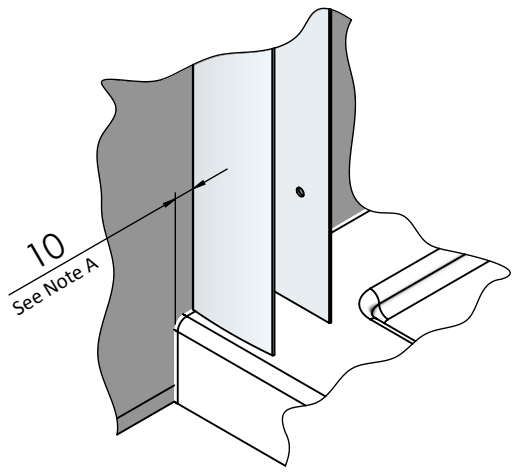

2

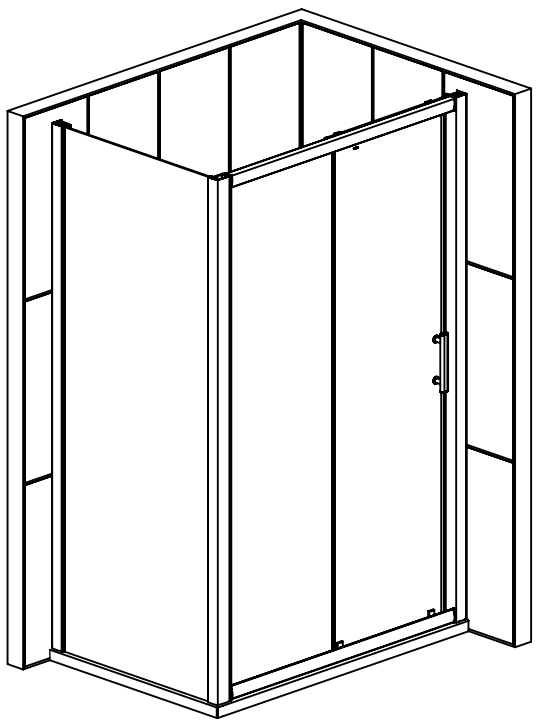

SLIDE THE SIDE PANEL INTO THE REAR WALL PROFILE, THEN SILDE THE CORNER POST ONTO THE ENCLOSURE / DOOR.

CENTRALISE THE ENCLOSURE / DOOR SO IT HAS THE SAME AMOUNT OF FRAME IN THE SIDE WALL PROFILE AND CORNER POST.

NOW ADJUST THE SIDE PANEL IN THE REAR WALL PROFILE UNTIL THERE IS AN EVEN GAP ALL AROUND THE ENCLOSURE AND TRAY FACE.

IT IS VERY IMPORTANT THAT THE SIDE PANEL AND ENCLOSURE ARE TRUE AND SQUARE ON ALL FACES BEFORE FIXING THE UNITS IN PLACE.

THE DOOR MUST ALSO OPERATE FREELY AND RUN SMOOTH.

3

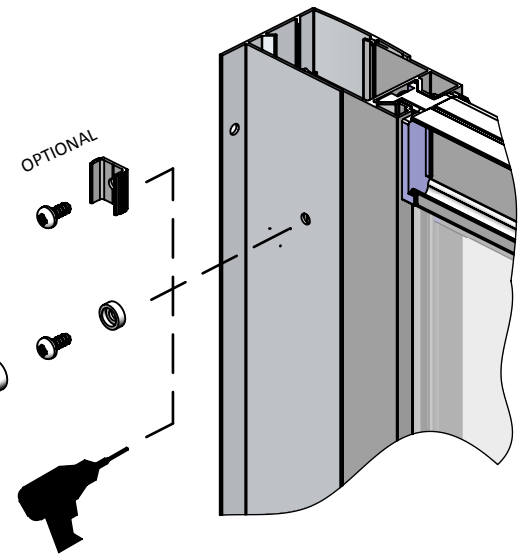

WHEN THE ENCLOSURE IS READY TO BE FIXED, DRILL THROUGH THE HOLES IN THE WALL PROFILE AND CORNER POST WITH A 3mm DRILL. (MAKE SURE YOU ONLY DRILL THROUGH ONE WALL THICKNESS) THEN FIX THE FRAME WITH ITEMS 10, 11* & 12*.

* IF YOU HAVE THE OPTIONAL SCREW COVER PROFILES (ITEM 2) DO NOT USE ITEMS 11 & 12, FIT ITEM 3 UNDER THE SCREWS.

4

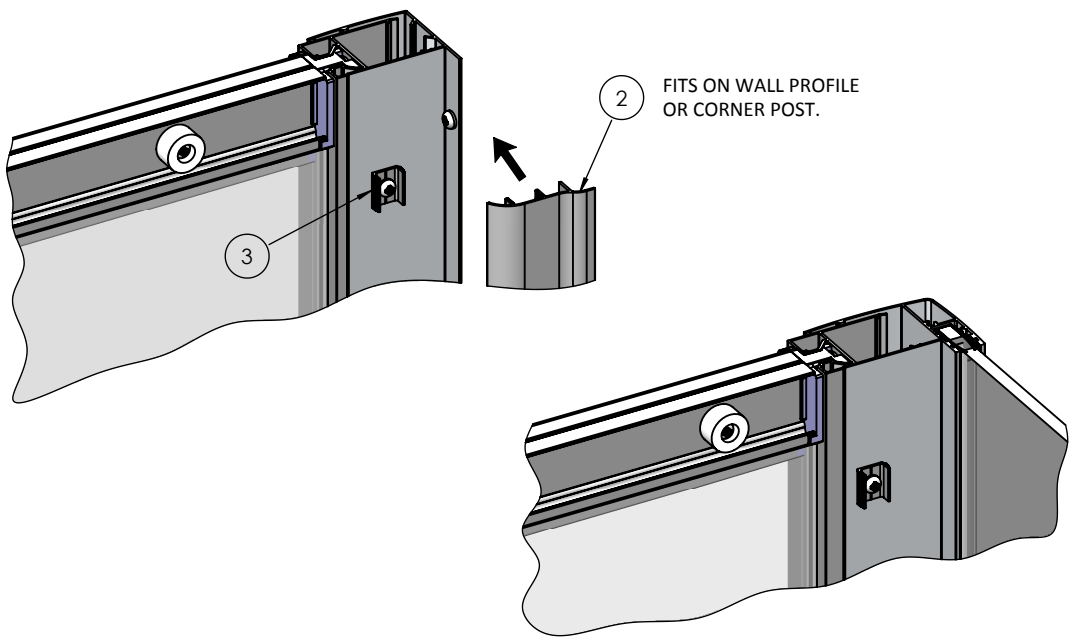

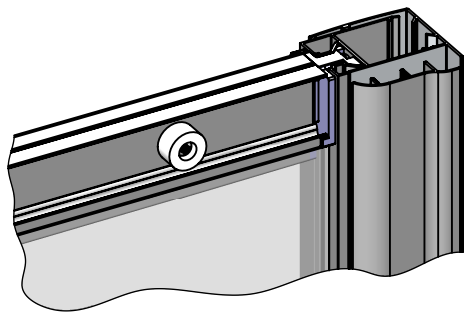

IF THE ENCLOSURE OR SIDE PANEL HAS THE OPTIONAL SCREW COVER PROFILES (ITEM 2) PUSH FIT THEM ONTO THE SCREW COVER PROFILE FIXING CLIPS (ITEM 3).

5

FIT THE ENCLOSURE TOP CAPS.

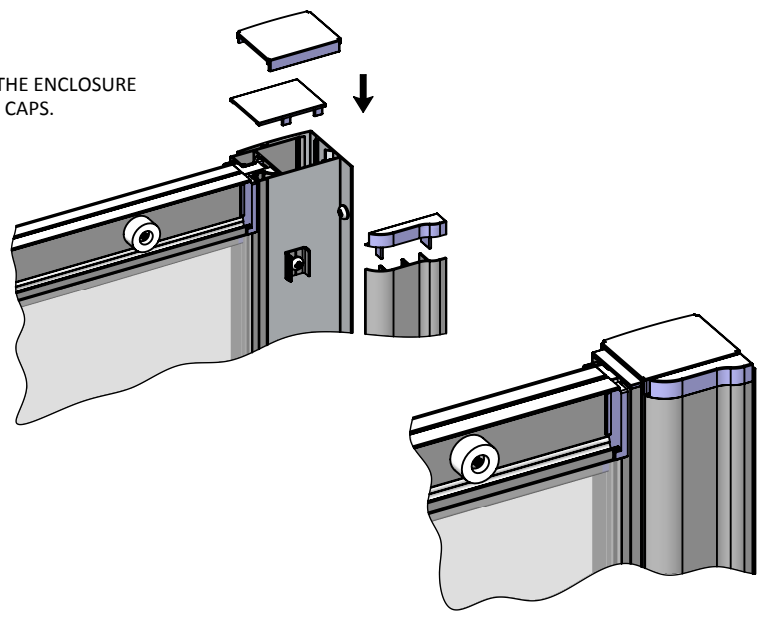

6

FIT THE CORNER POST CAPS.

