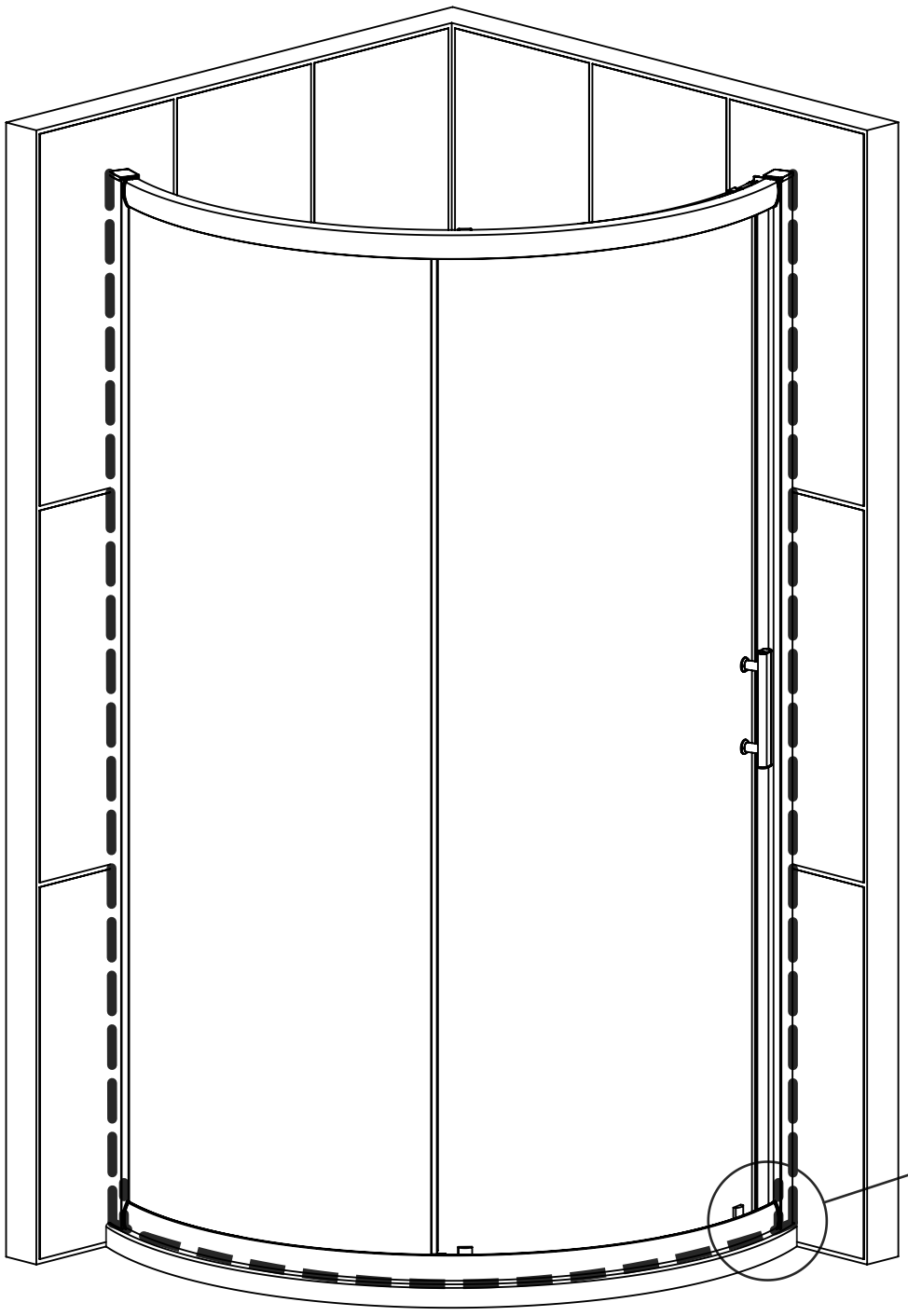

EXTERNALLY SILICONE SEAL THE WALL PROFILES WHERE THEY MEET THE WALL AND THE BOTTOM PROFILE WHERE IT MEETS THE TRAY. ALL IN A CONTINUOUS BEAD.

ALSO SILICONE PLASTIC MOULDING AND 150mm HIGH AS SHOWN ON DETAILED VIEW BELOW.

DO NOT SILICONE INSIDE THE ENCLOSURE.

ALLOW THE SILICONE AT LEAST 24 HOURS TO FULLY CURE.

AFTERCARE - ENSURE YOU CLEAN YOUR PRODUCT USING A MILD DETERGENT DILUTED IN WATER, REMOVING ANY RESIDUE WITH A SOFT DAMP CLOTH.
MAINTENANCE - ENSURE MOVING PARTS ARE FREE FROM ANY DEBRIS OR SOAP BUILD UP.
SHOWER ENCLOSURE WITH WHEELS - THE WHEELS MUST ROTATE FREELY AND THE SPRING LOADED MECHANISM IN THE BOTTOM WHEELS MUST OPERATE WITHOUT INTERFERENCE.

TROUBLE SHOOTING GUIDE

1. IS THE TRAY LEVEL? (SEE STEP 1).
2. ARE THE TOP AND BOTTOM TRACKS FULLY INSERTED AND FLUSH WITH THE VERTICAL PROFILES? (SEE STEP 2).
3. ARE THE RETAINER SCREWS FITTED TO LOCK THE TOP TRACK IN PLACE? (SEE STEP 2).
4. IS THE BOTTOM SEAL FITTED? (SEE STEP 3).
5. HAVE YOU COMPLETED STEP 4 CORRECTLY?
6. ARE THE WALL PROFILES PLUMB VERTICALLY? (SEE STEP 4).
7. DO THE DOOR MAGNETS ATTRACT TO EACH OTHER? (SEE STEP 10).
8. DO THE FINISHED TRAY MEASUREMENTS COMPLY WITH THE ADJUSTMENTS LISTED IN THE PRODUCT SPECIFICATION?
9. HAS THE FIXED PANEL BEEN PROPERLY SECURED? (SEE STEP 3).
10. WHEN CONSIDERING THE LENGTH OF THE TOP TRACK ALSO CONSIDER THE VERTICAL PROFILES THAT ARE SECURED TO IT WHICH INCREASE ITS LENGTH.
11. ONCE INSTALLED LEAVE THE ENCLOSURE DOORS IN THE CLOSED POSITION WHEN NOT IN USE AS MAGNET STRENGTH WILL INCREASE OVER THE FIRST WEEK.

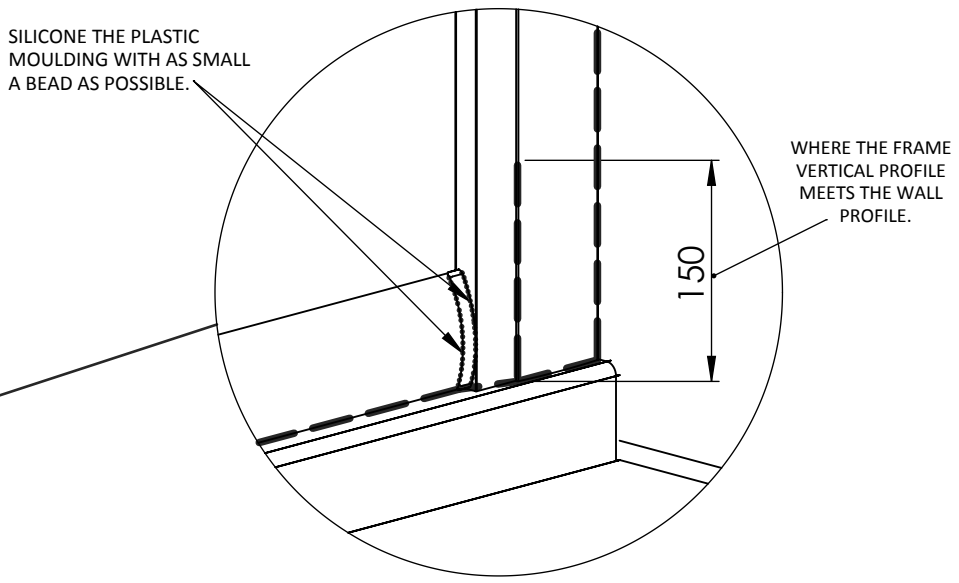

SINGLE ENTRY EASY FIT ENCLOSURE INSTRUCTIONS

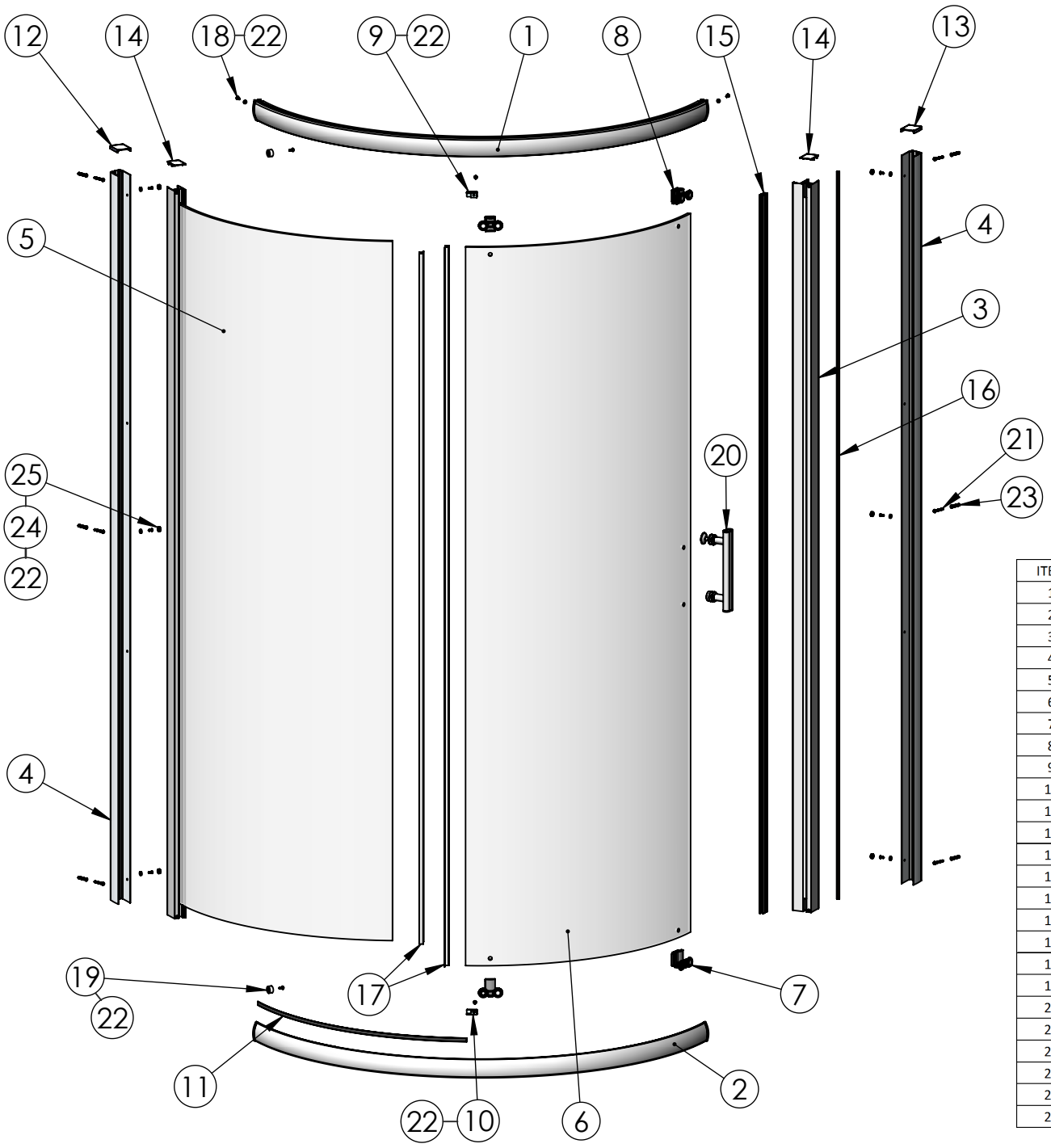

UNPACK THE BOX AND ENSURE ALL COMPONENTS ARE PRESENT.

NO REFUNDS OR REFITTING COST WILL BE GIVEN IF INCOMPLETE OR DAMAGED GOODS ARE FITTED.

THE TOUGHENED SAFETY GLASS SHOULD BE HANDLED WITH CARE AS IMPACTS WILL DAMAGE THE GLASS OR ENCLOSURE.

FIT THE SHOWER TRAY AS PER THE MANUFACTURERS INSTRUCTIONS.

NOTE: IF THE TRAY ISN'T TRUE AND LEVEL, IT MUST BE RECTIFIED BEFORE SILICONING AROUND THE TOP EDGE OF THE TRAY WHERE IT MEETS THE TILES. ALLOW THE SILICONE TO DRY BEFORE FITTING THE ENCLOSURE.

THE ENCLOSURE INSTALLATION IS RECOMMENDED AS A TWO MAN OPERATION.

TOOLS REQUIRED

POWER DRILL - 3mm DRILL BIT - 6mm MASONARY DRILL BIT
CROSS HEAD SCREW DRIVER - TAPE MEASURE - PENCIL
SILICONE GUN WITH SANITARY GRADE SEALANT - SPIRIT LEVEL
RUBBER HEAD MALLET

ITEM	DESCRIPTION	Notes	QTY
1	TOP TRACK		1
2	BOTTOM TRACK		1
3	MAGNET POST		1
4	WALL PROFILE		2
5	FIXED PANEL SUB ASSEMBLY		1
6	DOOR GLASS		1
7	BOTTOM ROLLER (SPRING LOADED)		2
8	TOP ROLLER (SCREW ADJUSTED)		2
9	GLASS CLIP RH		1
10	GLASS CLIP LH		1
11	GLASS BOTTOM SEAL		1
12	WALL PROFILE TOP CAP LH		1
13	WALL PROFILE TOP CAP RH		1
14	RECTANGULAR CAP		2
15	DOOR MAGNET		1
16	CONCEALED MAGNET		1
17	VERTICAL SEAL	CUT TO LENGTH AS REQ'D	2
18	NYLON WASHER		2
19	BUMP STOP		2
20	HANDLE SUB ASSEMBLY		1
21	SCREW DIA 3.9mm x 30mm PAN HEAD	FOR FIXING TO WALL	6
22	SCREW DIA 3.9mm x 10mm PAN HEAD		14
23	RAWLPLUG		6
24	SCREW CUP		14
25	SCREW CHROME CAP		14

1

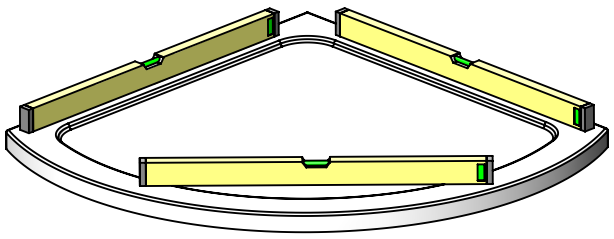

ENSURE THE TRAY IS LEVEL IN ALL PLANES.

2

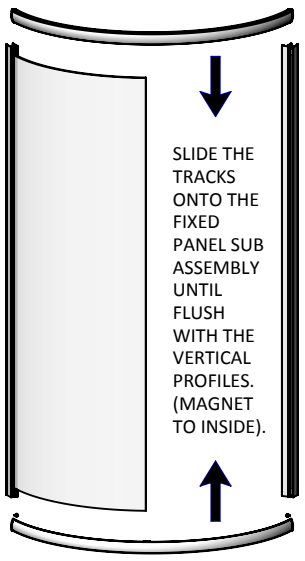

SLIDE THE TRACKS ONTO THE FIXED PANEL SUB ASSEMBLY UNTIL FLUSH WITH THE VERTICAL PROFILES. (MAGNET TO INSIDE).

ONCE PARTIALLY ENGAGED IT MAY BE NECESSARY TO LIGHTLY TAP THE TRACK ALL THE WAY HOME. USING A SOFT MALLET.

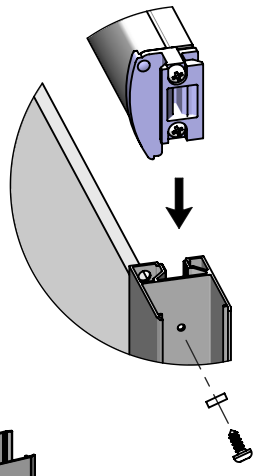

ENSURE BUMP STOP HOLE IS POSITIONED NEXT TO FIXED PANEL SUB ASSEMBLY (ITEM 5).

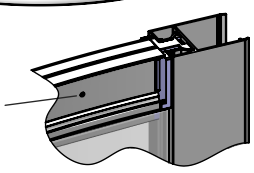

WHEN THE TOP TRACK IS IN PLACE FIT ITEMS 18 & 22 INTO THE TOP HOLES (WHERE SHOWN) TO LOCK THE TRACK IN PLACE.

3

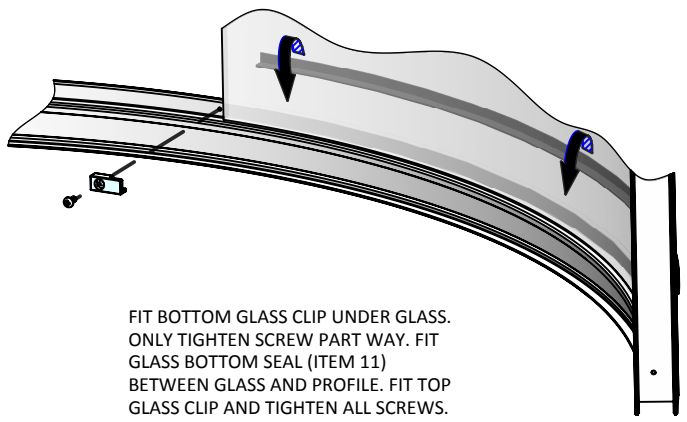

FIT BOTTOM GLASS CLIP UNDER GLASS. ONLY TIGHTEN SCREW PART WAY. FIT GLASS BOTTOM SEAL (ITEM 11) BETWEEN GLASS AND PROFILE. FIT TOP GLASS CLIP AND TIGHTEN ALL SCREWS.

ALTERNATIVELY USE A SMALL BEAD OF CLEAR SILICONE ON THE OUTSIDE OF THE GLASS INSTEAD OF THE SEAL.

ONLY USE ON SIDE DOOR ISN'T HANGING.

4

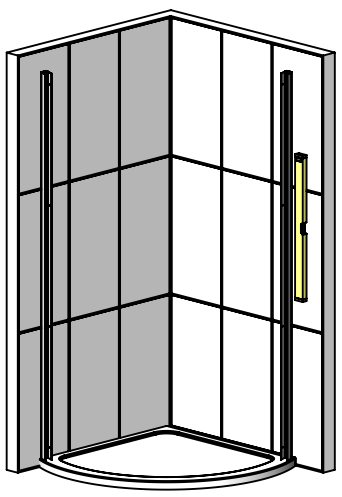

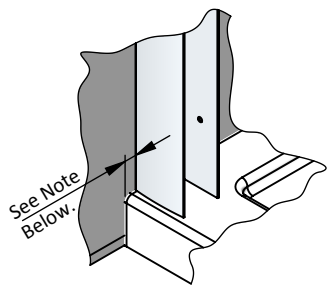

OFFER THE FRAME ONTO THE TRAY FIRST. ENSURE WALL PROFILES WILL REACH BOTH WALLS.

IN AN IDEAL INSTALLATION
SET THE WALL PROFILES 10mm BACK FROM THE FACE OF THE TRAY. MAKE SURE THEY ARE TRUE WITH A SPIRIT LEVEL, THEN MARK THROUGH THE FIXING HOLES WITH A PENCIL. REMOVE PROFILES THEN DRILL AND PLUG THE WALL (ITEM 23). NOW FIX THE WALL PROFILES IN PLACE USING ITEMS 21.

5

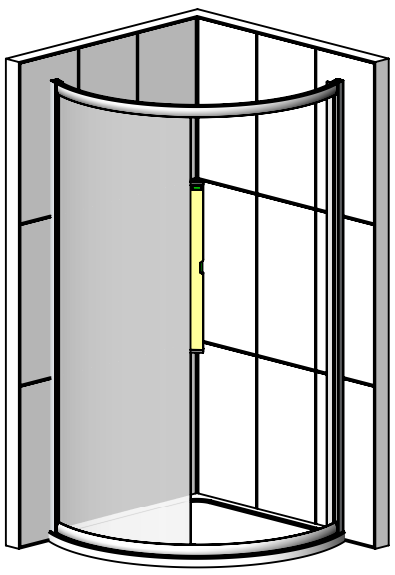

FIT THE FRAME INTO THE WALL PROFILES, CHOOSE LEFT HAND OR RIGHT HAND ORIENTATION. ADJUSTING UNTIL THERE IS AN EVEN GAP BETWEEN THE FRONT EDGE OF THE TRAY AND BOTTOM TRACK (12mm). THERE SHOULD ALSO BE AN EQUAL AMOUNT OF FRAME IN EACH WALL PROFILE. ENSURE THE FRAME IS TRUE ON BOTH SIDES BEFORE IT IS FIXED IN PLACE.

6

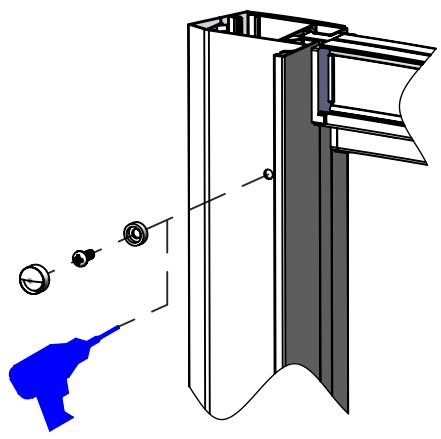

WHEN THE FRAME IS READY TO BE FIXED DRILL THROUGH THE HOLES IN THE WALL PROFILE WITH A 3mm DRILL.
(MAKE SURE YOU ONLY DRILL THROUGH ONE WALL THICKNESS)
THEN FIX THE FRAME WITH ITEMS 22, 24 & 25.

7

FIT THE BUMP STOPS (x2) TO THE TOP AND BOTTOM TRACK WITH ITEM 22.
DO NOT OVERTIGHTEN THE SCREWS.

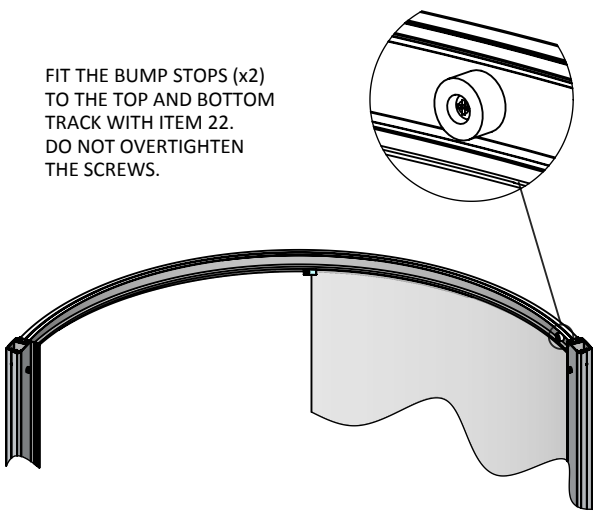

8

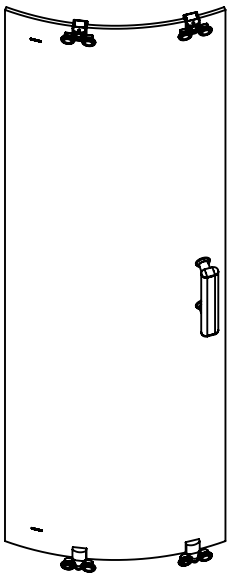

HEIGHT ADJUSTABLE TOP ROLLER.

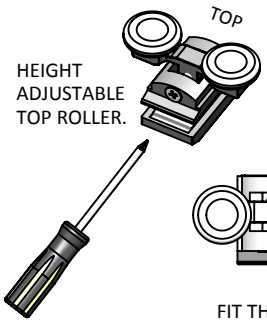

TURN ADJUSTER SCREW UNTIL THERE IS AN EQUAL GAP BEFORE FITTING.

FIT THE TOP ROLLERS, BOTTOM ROLLERS AND ALSO THE HANDLE ASSEMBLY TO THE DOOR (AS SHOWN).

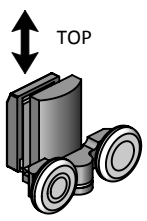

SPRING LOADED BOTTOM ROLLER.

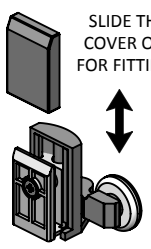

SLIDE THE COVER OFF FOR FITTING.

9

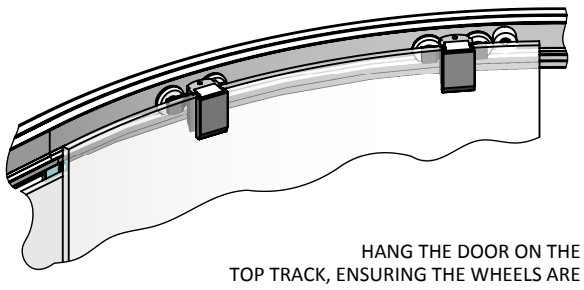

HANG THE DOOR ON THE TOP TRACK, ENSURING THE WHEELS ARE LOCATED IN THE PROFILE CHANNEL. THEN FROM OUTSIDE PUSH DOWN ON THE BOTTOM ROLLERS TO LOCATE THEM INTO THE BOTTOM TRACK CHANNEL.

WHEN THE DOOR IS FITTED TURN THE ADJUSTER SCREW ON THE TOP ROLLERS UNTIL THE DOOR IS PARALLEL TO THE MAGNETIC POST.

10

CUT THE VERTICAL PVC SEALS TO LENGTH AS FOLLOWS:
1850 HIGH ENCLOSURE = 1 x 1827mm (DOOR) & 1 x 1756mm (FIXED GLASS).
1900 HIGH ENCLOSURE = 1 x 1877mm (DOOR) & 1 x 1806mm (FIXED GLASS).

CUT THE DOOR MAGNETS TO LENGTH AS FOLLOWS:
1850 HIGH ENCLOSURE = 1 x 1827mm.
1900 HIGH ENCLOSURE = 1 x 1877mm.

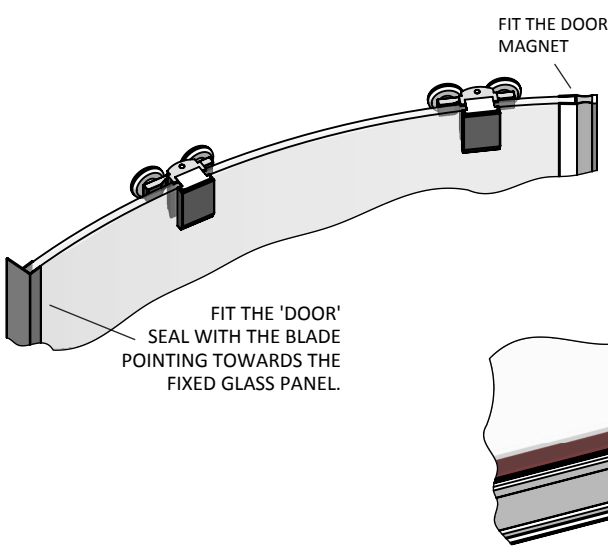

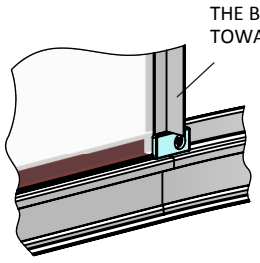

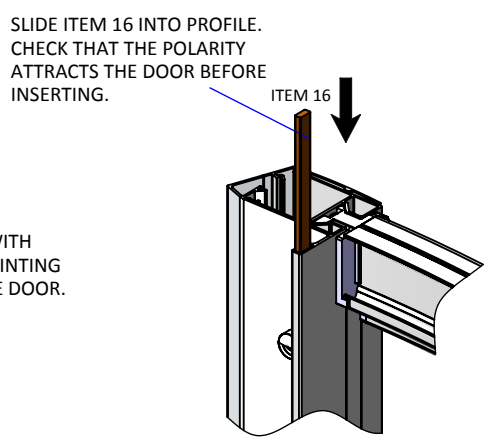

11

