Sales Code: YBAU027 **Barcode:** 5056462606118 **Brand:** BC Designs **Description:** BC Designs Mistley 1690mm Freestanding Bath - No Legs



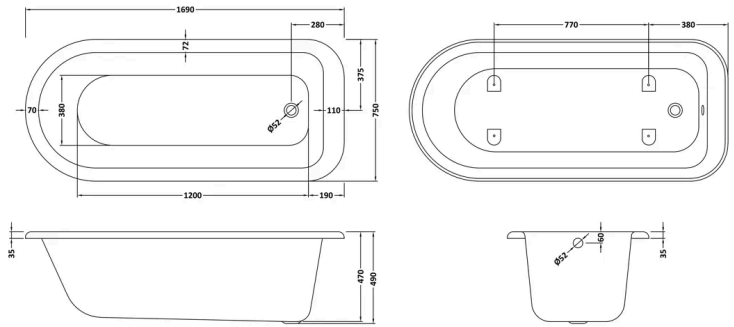

Product Dimensions

Product	650 x 750 x 1690mm (H x W x L)
Packaged	500 x 700 x 1700mm (H x W x D)
Nett Weight	40 kg
Packaged Weight	42.5 kg

Packaging Details

Box Qty	1

Product Details

Volume	200 Litre
Country of Origin	China
Product Material	Acrylic
Colour/Finish	White
Style	Traditional
Fixings Included	No
Bath Panel Included	No
Ce Certified	Yes
Displaced Capacity	130 Litre
Includes Grips	No
Leg Set Included	No
No. Of Tapholes	No Tapholes
Overflow Included	Yes
Tap Included	No
Ukca Certified	No
Waste Included	No

© ROXOR Group