Sales Code: WE-413LPG **Barcode:** 5056883764732 **Brand:** Synergy **Description:** Synergy Weston Pebble Grey 1100mm Compact Unit & Left Hand Polymarble Basin



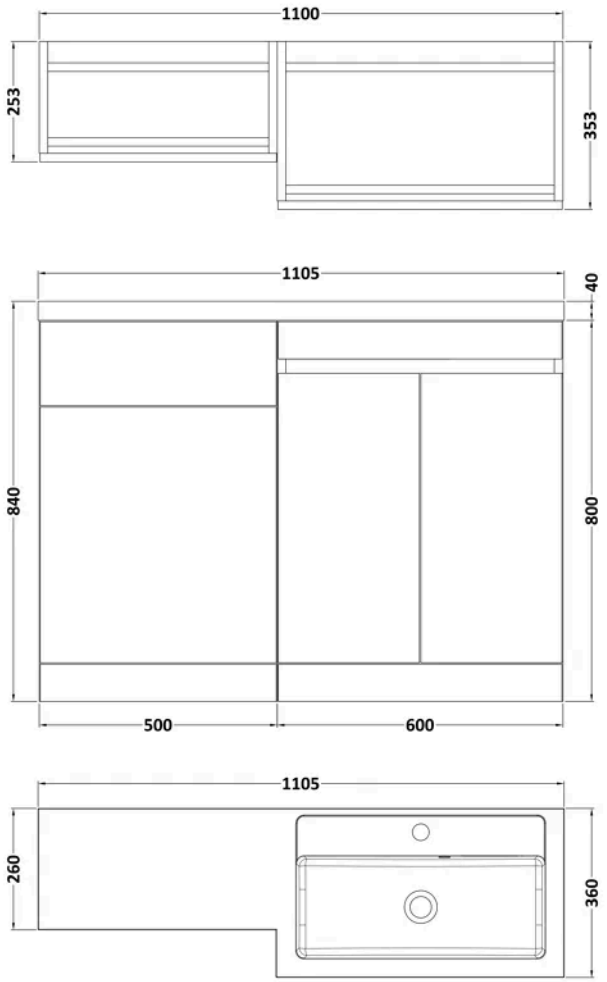

Product Dimensions

Product	840 x 1105 x 360mm (H x W x D)
Packaged	880 x 610 x 370mm (H x W x D)
Nett Weight	53 kg
Packaged Weight	53 kg

Product Details

Country of Origin	China
Product Material	Mfc Smooth Matt
Colour/Finish	Pebble Grey
Mount Type	Floor
Style	Contemporary
Construction Method	Cam & Wood Dowel
Construction Type	Rigid
Fascia Finish	Mfc Smooth Matt
Handles Included	No
Inner Bowl Height	103 mm
Leg Set Included	No
Material Thickness	18 mm
No. Doors	2
No. Of Tapholes	1
Number Of Bowls	1
Overflow Cover Included	Yes
Overflow Included	Yes
Tap Included	No

© ROXOR Group

Sales Code: WE-103PG **Barcode:** 5056474587375 **Brand:** Synergy **Description:** Synergy Weston 600mm Pebble Grey 2 Door Compact Unit



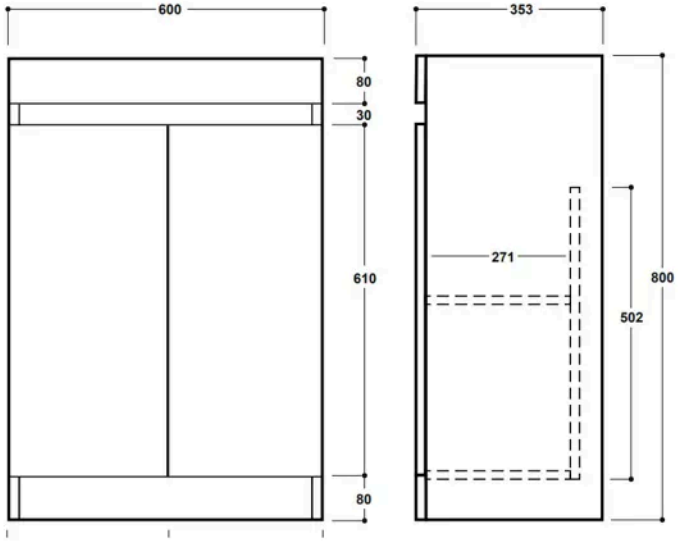

Product Dimensions

Product	800 x 600 x 353mm (H x W x D)
Packaged	880 x 610 x 370mm (H x W x D)
Nett Weight	23 kg
Packaged Weight	23 kg

Packaging Details

Box Qty	1

Product Details

Country of Origin	United Kingdom
Product Material	Mfc Smooth Matt
Colour/Finish	Pebble Grey
Mount Type	Floor
Style	Contemporary
Handle Type	Handleless
Construction Method	Cam & Wood Dowel
Construction Type	Rigid
Fascia Finish	Mfc Smooth Matt
Handles Included	No
Material Thickness	18 mm
No. Doors	2
No. Shelves	1
Number Of Shelves	1

© ROXOR Group

Sales Code: WE-104PG **Barcode:** 5056474587429 **Brand:** Synergy **Description:** Synergy Weston Pebble Grey 500mm Floor Standing WC Unit



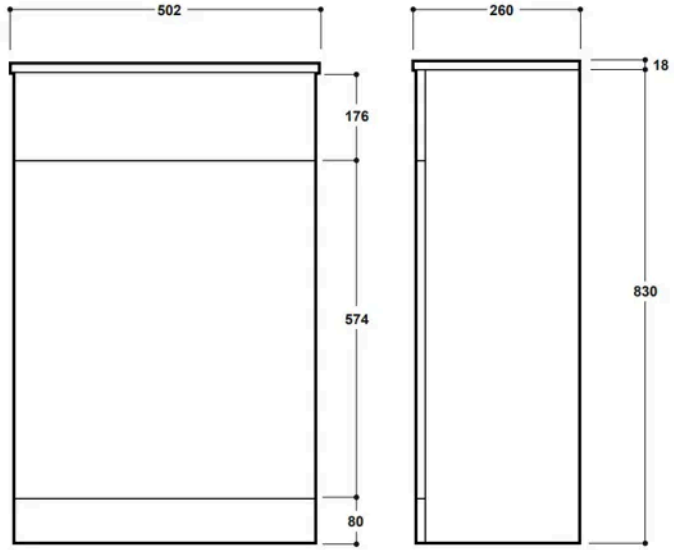

Product Dimensions

Product	830 x 502 x 260mm (H x W x D)
Packaged	900 x 510 x 270mm (H x W x D)
Nett Weight	14 kg
Packaged Weight	14 kg

Packaging Details

Box Qty	1

Product Details

Country of Origin	United Kingdom
Product Material	Mfc Smooth Matt
Colour/Finish	Pebble Grey
Mount Type	Floor
Style	Contemporary
Construction Method	Cam & Wood Dowel
Construction Type	Rigid
Fascia Finish	Mfc Smooth Matt
Material Thickness	18 mm

© ROXOR Group

Sales Code: WE-110LHPB **Barcode:** 5056474587573 **Brand:** Synergy **Description:** Synergy Weston 1100mm 1 Tap Hole Left Hand Polymarble Basin



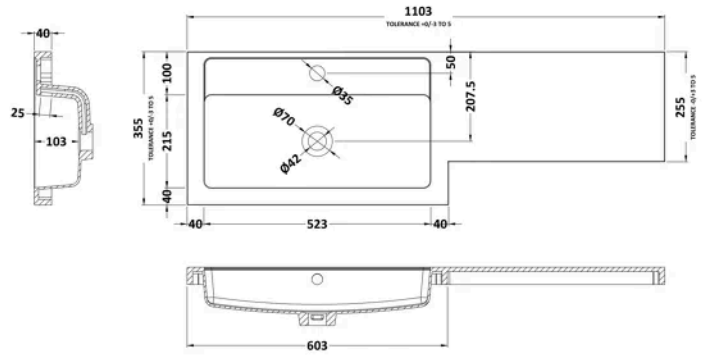

Product Dimensions

Product	135 x 1103 x 355mm (H x W x D)
Packaged	190 x 420 x 1160mm (H x W x D)
Nett Weight	16 kg
Packaged Weight	16 kg

Packaging Details

Box Qty	1

Product Details

Country of Origin	China
Product Material	Polymarble
Colour/Finish	White
Style	Contemporary
Ce Certified	Yes
Inner Bowl Height	103 mm
No. Of Tapholes	1
Number Of Bowls	1
Overflow Included	Yes
Tap Included	No
Waste Included	No

© ROXOR Group