**Sales Code:** WE-413LBK **Barcode:** 5056883764725 **Brand:** Synergy **Description:** Synergy Weston Soft Black 1100mm Compact Unit & Left Hand Polymarble Basin



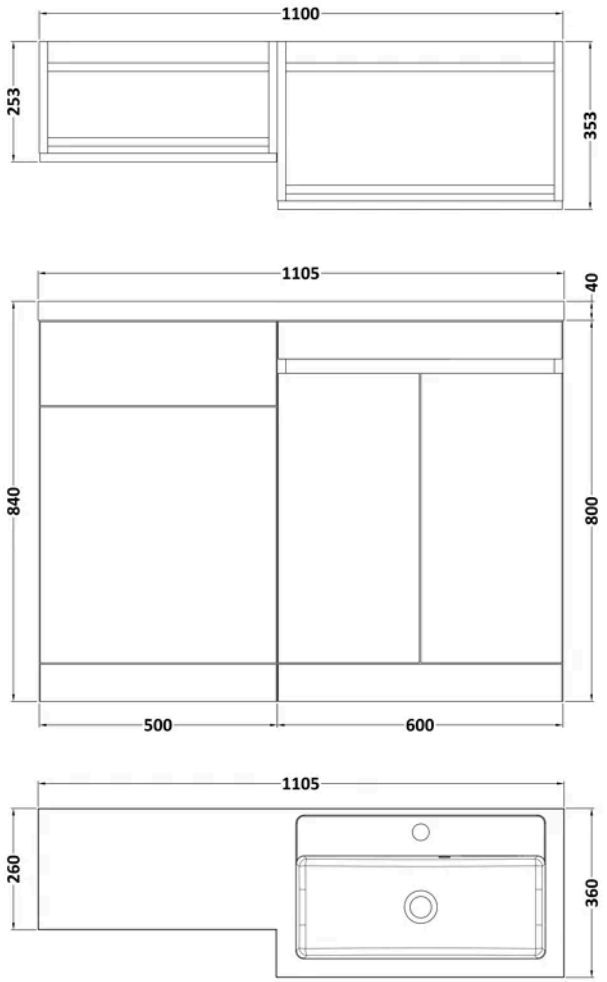


## Product Dimensions

| | |
|---|---|
| Product | 840 x 1105 x 360mm (H x W x D) |
| Packaged | 880 x 610 x 370mm (H x W x D) |
| Nett Weight | 53 kg |
| Packaged Weight | 53 kg |

## Product Details

| | |
|---|---|
| Country of Origin | China |
| Product Material | Mfc Smooth Matt |
| Colour/Finish | Soft Black |
| Mount Type | Floor |
| Style | Contemporary |
| Construction Method | Cam & Wood Dowel |
| Construction Type | Rigid |
| Fascia Finish | Mfc Smooth Matt |
| Handles Included | No |
| Inner Bowl Height | 103 mm |
| Leg Set Included | No |
| Material Thickness | 18 mm |
| No. Doors | 2 |
| No. Of Tapholes | 1 |
| Number Of Bowls | 1 |
| Overflow Cover Included | Yes |
| Overflow Included | Yes |
| Tap Included | No |

© ROXOR Group

**Sales Code:** WE-103BK **Barcode:** 5056474587368 **Brand:** Synergy **Description:** Synergy Weston 600mm Soft Black Satin Soft Black 2 Door Compact Unit



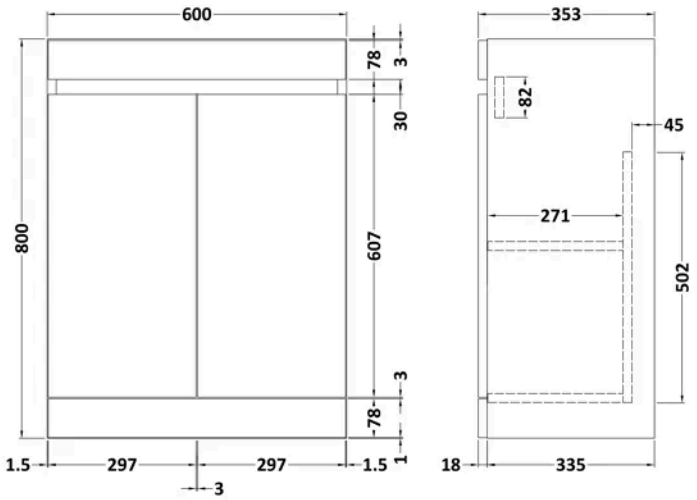


## Product Dimensions

| | |
|---|---|
| Product | 800 x 600 x 353mm (H x W x D) |
| Packaged | 880 x 610 x 370mm (H x W x D) |
| Nett Weight | 23 kg |
| Packaged Weight | 23 kg |

## Packaging Details

| | |
|---|---|
| Box Qty | 1 |

## Product Details

| | |
|---|---|
| Country of Origin | United Kingdom |
| Product Material | Mfc Smooth Matt |
| Colour/Finish | Soft Black |
| Mount Type | Floor |
| Style | Contemporary |
| Handle Type | Handleless |
| Construction Method | Cam & Wood Dowel |
| Construction Type | Rigid |
| Fascia Finish | Mfc Smooth Matt |
| Handles Included | No |
| Material Thickness | 18 mm |
| No. Doors | 2 |
| No. Shelves | 1 |
| Number Of Shelves | 1 |

© ROXOR Group

**Sales Code:** WE-104BK **Barcode:** 5056474587412 **Brand:** Synergy **Description:** Synergy Weston Soft Black 500mm Floor Standing WC Unit



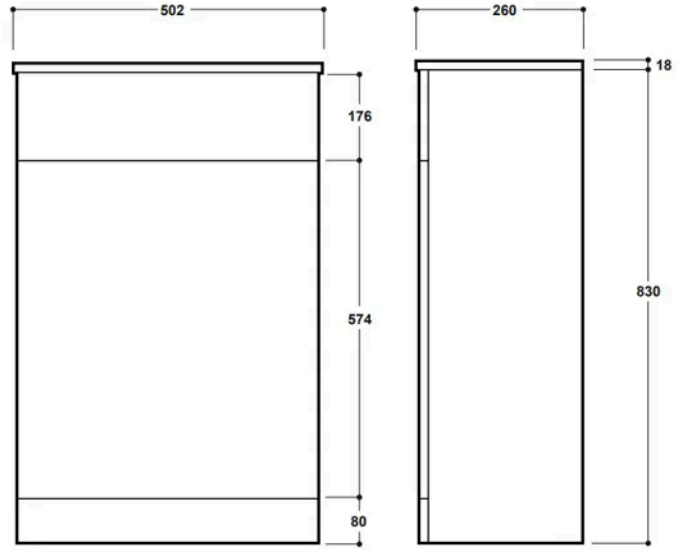


## Product Dimensions

| | |
|---|---|
| Product | 830 x 502 x 260mm (H x W x D) |
| Packaged | 900 x 510 x 270mm (H x W x D) |
| Nett Weight | 14 kg |
| Packaged Weight | 14 kg |

## Packaging Details

| | |
|---|---|
| Box Qty | 1 |

## Product Details

| | |
|---|---|
| Country of Origin | United Kingdom |
| Product Material | Mfc Smooth Matt |
| Colour/Finish | Soft Black |
| Mount Type | Floor |
| Style | Contemporary |
| Construction Method | Cam & Wood Dowel |
| Construction Type | Rigid |
| Fascia Finish | Mfc Smooth Matt |
| Material Thickness | 18 mm |

© ROXOR Group

**Sales Code:** WE-110LHPB **Barcode:** 5056474587573 **Brand:** Synergy **Description:** Synergy Weston 1100mm 1 Tap Hole Left Hand Polymarble Basin



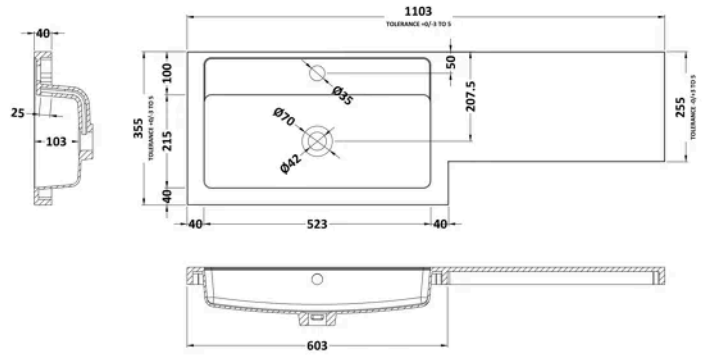


## Product Dimensions

| | |
|---|---|
| Product | 135 x 1103 x 355mm (H x W x D) |
| Packaged | 190 x 420 x 1160mm (H x W x D) |
| Nett Weight | 16 kg |
| Packaged Weight | 16 kg |

## Packaging Details

| | |
|---|---|
| Box Qty | 1 |

## Product Details

| | |
|---|---|
| Country of Origin | China |
| Product Material | Polymarble |
| Colour/Finish | White |
| Style | Contemporary |
| Ce Certified | Yes |
| Inner Bowl Height | 103 mm |
| No. Of Tapholes | 1 |
| Number Of Bowls | 1 |
| Overflow Included | Yes |
| Tap Included | No |
| Waste Included | No |

© ROXOR Group