Sales Code: WE-412RGN **Barcode:** 5056883764695 **Brand:** Synergy **Description:** Synergy Weston Reed Green 1000mm Compact Unit & Right Hand Polymarble Basin



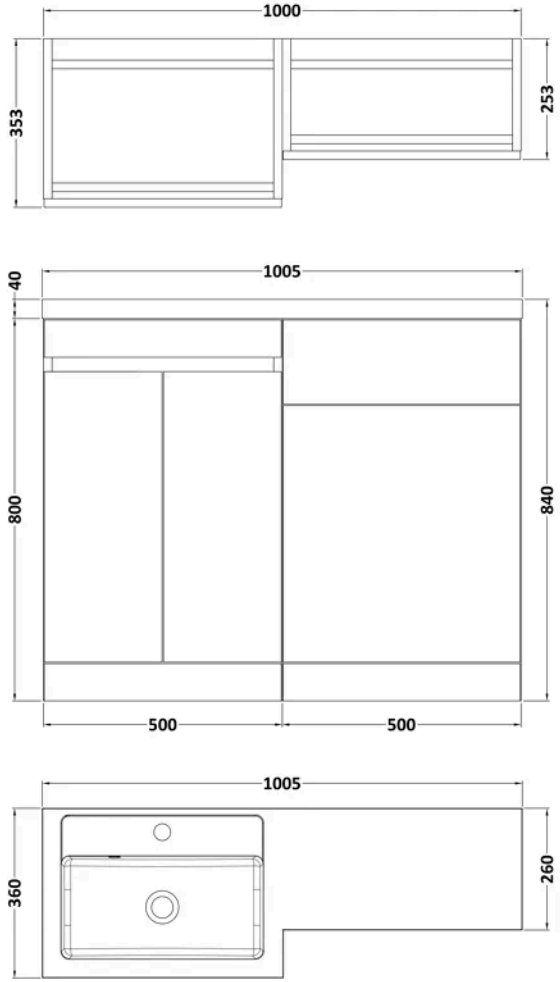

Product Dimensions

Product	840 x 1005 x 360mm (H x W x D)
Packaged	880 x 510 x 370mm (H x W x D)
Nett Weight	50 kg
Packaged Weight	50 kg

Product Details

Country of Origin	China
Product Material	Mfc Smooth Matt
Colour/Finish	Reed Green
Mount Type	Floor
Style	Contemporary
Construction Method	Cam & Wood Dowel
Construction Type	Rigid
Fascia Finish	Mfc Smooth Matt
Handles Included	No
Inner Bowl Height	103 mm
Leg Set Included	No
Material Thickness	18 mm
No. Doors	2
No. Of Tapholes	1
Number Of Bowls	1
Overflow Cover Included	Yes
Overflow Included	Yes
Tap Included	No

© ROXOR Group

Sales Code: WE-100RHPB **Barcode:** 5056474587566 **Brand:** Synergy **Description:** Synergy Weston 1000mm 1 Tap Hole Right Hand Polymarble Basin



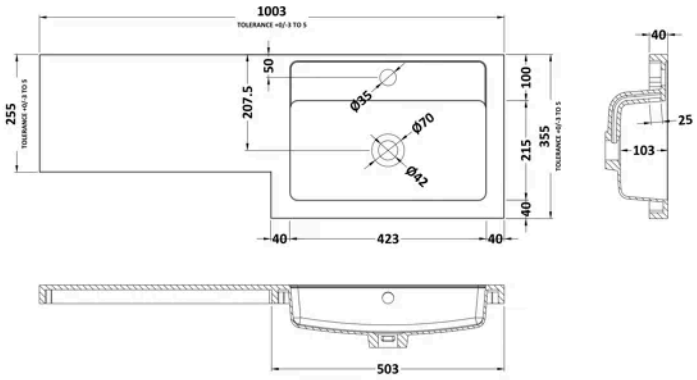

Product Dimensions

Product	135 x 1003 x 355mm (H x W x D)
Packaged	190 x 420 x 1060mm (H x W x D)
Nett Weight	15 kg
Packaged Weight	15 kg

Packaging Details

Box Qty	1

Product Details

Country of Origin	China
Product Material	Polymarble
Colour/Finish	White
Style	Contemporary
Ce Certified	Yes
Inner Bowl Height	103 mm
No. Of Tapholes	1
Number Of Bowls	1
Overflow Included	Yes
Tap Included	No
Waste Included	No

© ROXOR Group

Sales Code: WE-102GN **Barcode:** 5056474587337 **Brand:** Synergy **Description:** Synergy Weston 500mm Reed Green 2 Door Compact Unit



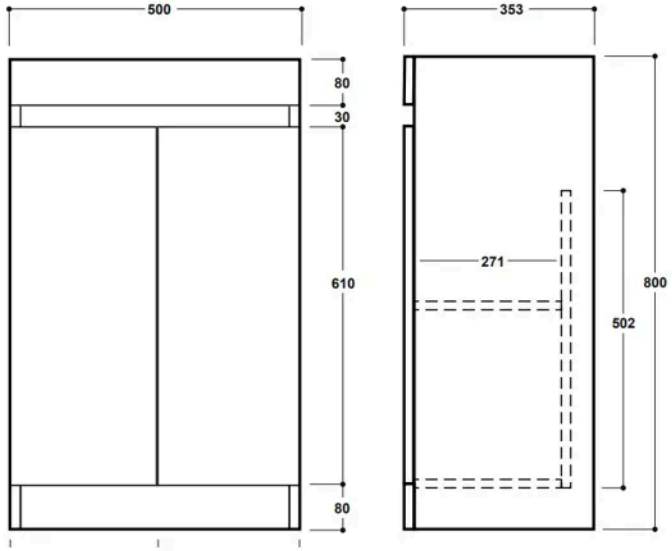

Product Dimensions

Product	800 x 500 x 353mm (H x W x D)
Packaged	880 x 510 x 370mm (H x W x D)
Nett Weight	21 kg
Packaged Weight	21 kg

Packaging Details

Box Qty	1

Product Details

Country of Origin	United Kingdom
Product Material	Mfc Smooth Matt
Colour/Finish	Reed Green
Mount Type	Floor
Style	Contemporary
Handle Type	Handleless
Construction Method	Cam & Wood Dowel
Construction Type	Rigid
Fascia Finish	Mfc Smooth Matt
Handles Included	No
Material Thickness	18 mm
No. Doors	2
No. Shelves	1
Number Of Shelves	1

© ROXOR Group

Sales Code: WE-104GN **Barcode:** 5056474587436 **Brand:** Synergy **Description:** Synergy Weston Reed Green 500mm Floor Standing WC Unit



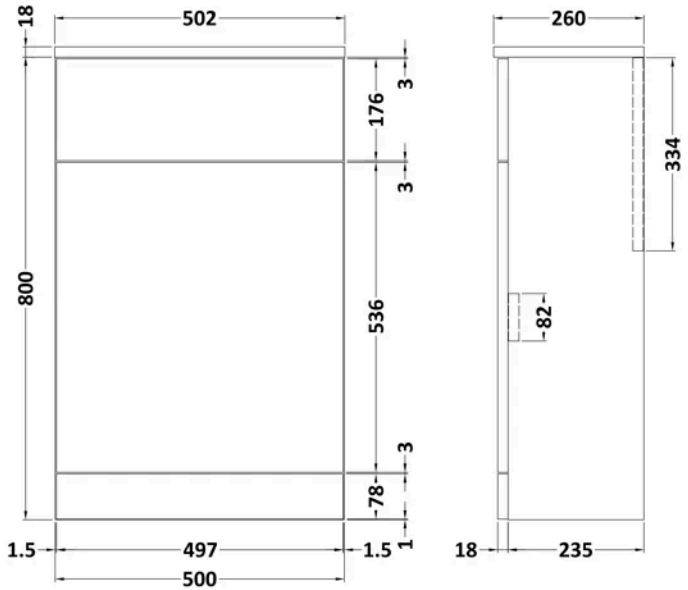

Product Dimensions

Product	830 x 502 x 260mm (H x W x D)
Packaged	900 x 510 x 270mm (H x W x D)
Nett Weight	14 kg
Packaged Weight	14 kg

Packaging Details

Box Qty	1

Product Details

Country of Origin	United Kingdom
Product Material	Mfc Smooth Matt
Colour/Finish	Reed Green
Mount Type	Floor
Style	Contemporary
Construction Method	Cam & Wood Dowel
Construction Type	Rigid
Fascia Finish	Mfc Smooth Matt
Material Thickness	18 mm

© ROXOR Group