Sales Code: WE-102WTB **Barcode:** 5056883764466 **Brand:** Synergy **Description:** Synergy Weston Gloss White 500mm 2 Door Compact Unit & Ceramic Basin



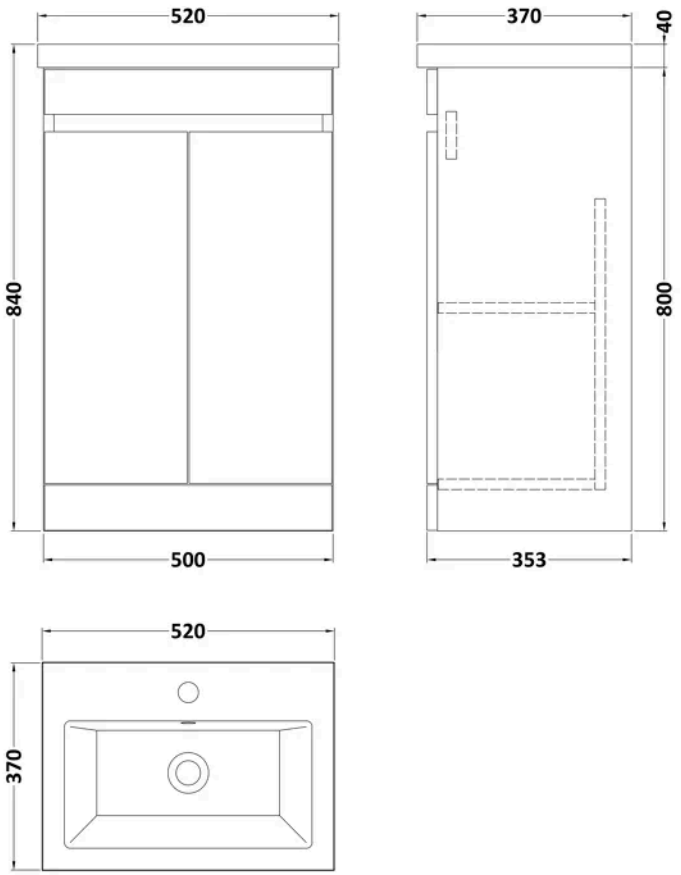

Product Dimensions

Product	840 x 520 x 370mm (H x W x D)
Packaged	880 x 510 x 370mm (H x W x D)
Nett Weight	29.1 kg
Packaged Weight	29.1 kg

Product Details

Country of Origin	China
Product Material	Mfc Smooth Matt
Colour/Finish	Gloss White
Mount Type	Floor
Style	Contemporary
Construction Method	Cam & Wood Dowel
Construction Type	Rigid
Fascia Finish	Mfc Smooth Matt
Handles Included	No
Inner Bowl Height	103 mm
Leg Set Included	No
Material Thickness	18 mm
No. Doors	2
No. Of Tapholes	1
Number Of Bowls	1
Overflow Cover Included	Yes
Overflow Included	Yes
Tap Included	No

© ROXOR Group

Sales Code: WE-102WT **Barcode:** 5056474587306 **Brand:** Synergy **Description:** Synergy Weston 500mm White 2 Door Floor Standing Compact Unit



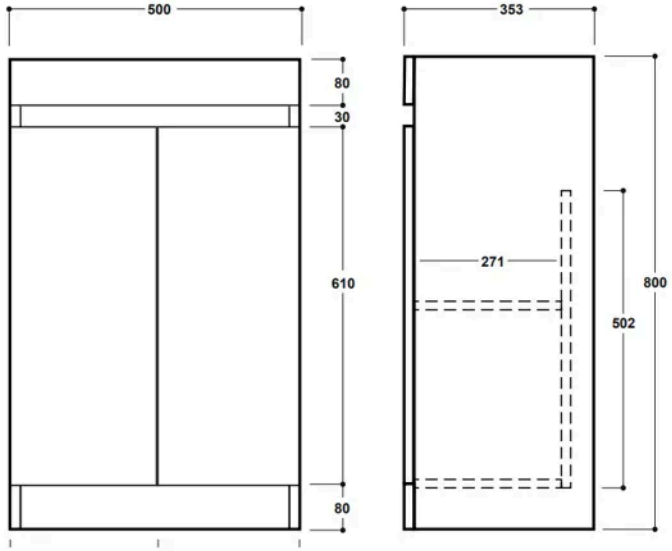

Product Dimensions

Product	800 x 500 x 353mm (H x W x D)
Packaged	880 x 510 x 370mm (H x W x D)
Nett Weight	21 kg
Packaged Weight	21 kg

Packaging Details

Box Qty	1

Product Details

Country of Origin	United Kingdom
Product Material	Mfc Smooth Matt
Colour/Finish	Gloss White
Mount Type	Floor
Style	Contemporary
Handle Type	Handleless
Construction Method	Cam & Wood Dowel
Construction Type	Rigid
Fascia Finish	Mfc Smooth Matt
Handles Included	No
Material Thickness	18 mm
No. Doors	2
No. Shelves	1
Number Of Shelves	1

© ROXOR Group

Sales Code: WE-50CB **Barcode:** 5056474587535 **Brand:** Synergy **Description:** Synergy Weston 520mm 1 Tap Hole Ceramic Basin



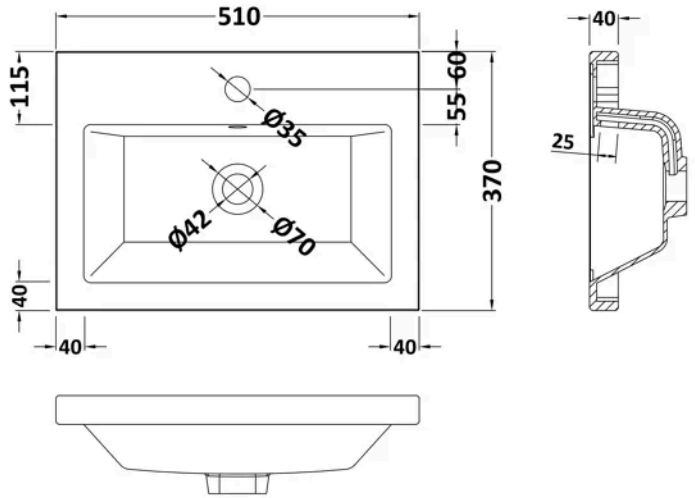

Product Dimensions

Product	150 x 520 x 370mm (H x W x D)
Packaged	420 x 210 x 550mm (H x W x D)
Nett Weight	8.1 kg
Packaged Weight	8.1 kg

Packaging Details

Box Qty	1

Product Details

Country of Origin	China
Product Material	Vitreous China
Colour/Finish	White
Style	Contemporary
Ce Certified	Yes
Inner Bowl Height	103 mm
No. Of Tapholes	1
Number Of Bowls	1
Overflow Included	Yes
Tap Included	No
Waste Included	No

© ROXOR Group