Sales Code: WE-100RHPB **Barcode:** 5056474587566 **Brand:** Synergy **Description:** Synergy Weston 1000mm 1 Tap Hole Right Hand Polymarble Basin



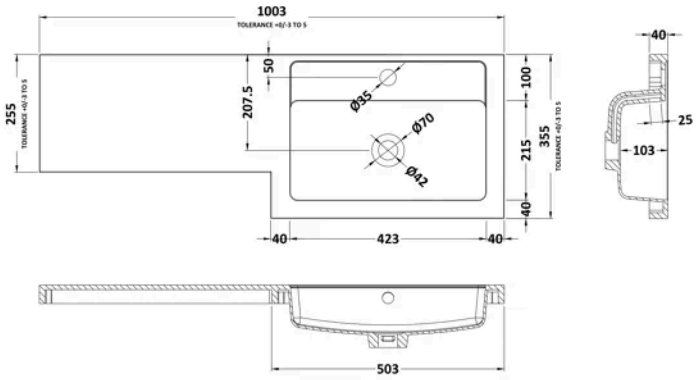

Product Dimensions

Product	135 x 1003 x 355mm (H x W x D)
Packaged	190 x 420 x 1060mm (H x W x D)
Nett Weight	15 kg
Packaged Weight	15 kg

Packaging Details

Box Qty	1

Product Details

Country of Origin	China
Product Material	Polymarble
Colour/Finish	White
Style	Contemporary
Ce Certified	Yes
Inner Bowl Height	103 mm
No. Of Tapholes	1
Number Of Bowls	1
Overflow Included	Yes
Tap Included	No
Waste Included	No

© ROXOR Group