Sales Code: WBS105 **Barcode:** 5056211822219 **Brand:** nuie **Description:** nuie 1600mm Left-Hand Square Shower Bath



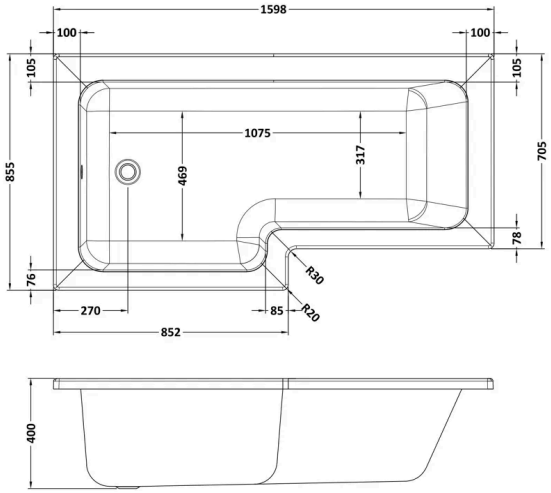

Product Dimensions

Product	400 x 855 x 1598mm (H x W x L)
Packaged	390 x 850 x 1600mm (H x W x D)
Nett Weight	23 kg
Packaged Weight	23 kg

Packaging Details

Label Size (mm)	38 x 192
Label Colour	White
Label Qty	1.0000

Product Details

Volume	200 Litre
Country of Origin	Turkey
Product Material	Acrylic
Colour/Finish	White
Style	Contemporary
Fixings Included	No
Bath Panel Included	No
Ce Certified	Yes
Declaration Of Performance	Yes
Displaced Capacity	130 Litre
Includes Grips	No
Leg Set Included	No
No. Of Tapholes	No Tapholes
Overflow Included	No
Tap Included	No
Ukca Certified	Yes
Waste Included	No

© ROXOR Group