Sales Code: WBS103 **Barcode:** 5055275824511 **Brand:** nuie **Description:** nuie 1500mm Left-Hand Square Shower Bath



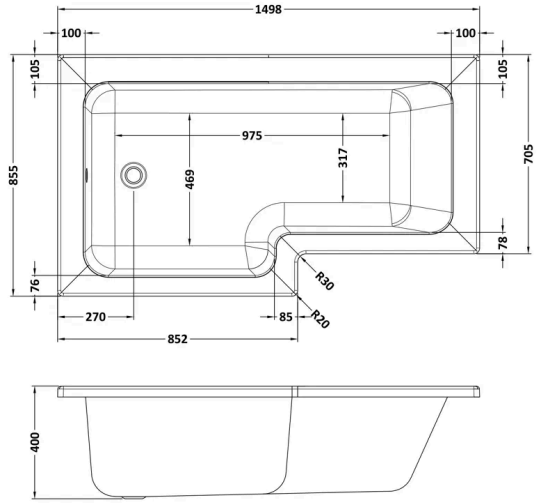

Product Dimensions

Product	400 x 855 x 1498mm (H x W x L)
Packaged	425 x 850 x 1500mm (H x W x D)
Nett Weight	24.5 kg
Packaged Weight	24.5 kg

Packaging Details

Label Colour	White

Product Details

Volume	200 Litre
Country of Origin	United Kingdom
Product Material	Acrylic
Colour/Finish	White
Style	Contemporary
Fixings Included	No
Bath Panel Included	No
Ce Certified	Yes
Displaced Capacity	130 Litre
Includes Grips	No
Leg Set Included	No
No. Of Tapholes	No Tapholes
Overflow Included	No
Tap Included	No
Waste Included	No

© ROXOR Group