Sales Code: WBP104 **Barcode:** 5055275824641 **Brand:** nuie **Description:** nuie 1500mm Right-Hand P Shaped Shower Bath



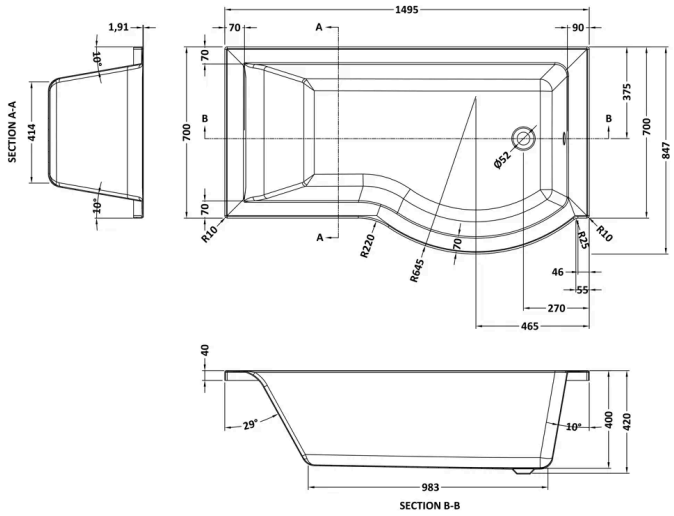

Product Dimensions

Product	415 x 850 x 1500mm (H x W x L)
Packaged	415 x 900 x 1500mm (H x W x D)
Nett Weight	19 kg
Packaged Weight	19 kg

Packaging Details

Box Qty	1
Label Size (mm)	35 x 300
Label Colour	White
Label Qty	2.0000

Product Details

Volume	164 Litre
Country of Origin	United Kingdom
Product Material	Acrylic
Colour/Finish	White
Style	Contemporary
Fixings Included	No
Bath Panel Included	No
Ce Certified	Yes
Displaced Capacity	94 Litre
Includes Grips	No
Leg Set Included	No
No. Of Tapholes	No Tapholes
Overflow Included	No
Tap Included	No
Waste Included	No

© ROXOR Group