Sales Code: WBAS801-J8 **Barcode:** 5056817701550 **Brand:** nuie Choice **Description:** nuie choice 1800mm L Shape Left-Hand 8 Chrome Jet Whirlpool Bath



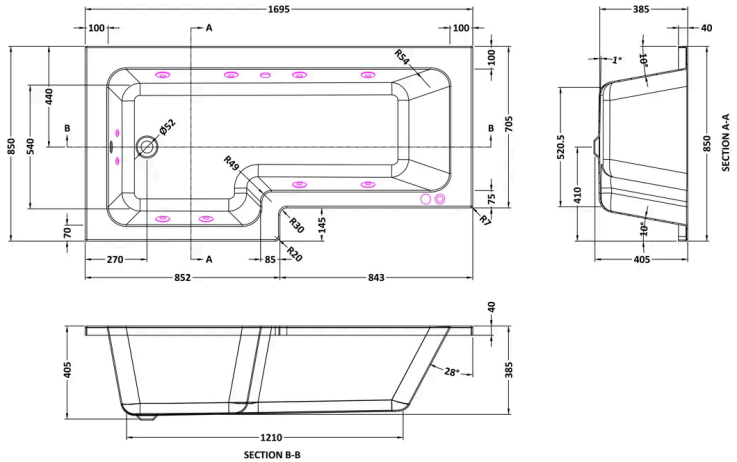

Product Dimensions

Product	390 x 850 x 1800mm (H x W x L)
Packaged	425 x 850 x 1800mm (H x W x D)
Nett Weight	38.5 kg
Packaged Weight	38.5 kg

Packaging Details

Label Size (mm)	35 x 300
Label Colour	White
Label Qty	2.0000

Product Details

Volume	235 Litre
Country of Origin	United Kingdom
Product Material	Acrylic
Colour/Finish	Chrome
Style	Contemporary
Fixings Included	No
Bath Panel Included	No
Ce Certified	Yes
Displaced Capacity	165 Litre
Hydrotherapy System	No
Includes Grips	No
Jet Finish	Chrome
Leg Set Included	Yes
No. Of Large Jets	8
No. Of Tapholes	No Tapholes
Overflow Included	Yes
Tap Included	No
Waste Included	No

© ROXOR Group