Sales Code: WBAS105WH-J8 **Barcode:** 5064007037228 **Brand:** nuie Choice **Description:** nuie choice 1600mm L Shape Left-Hand 8 White Jet Whirlpool Bath



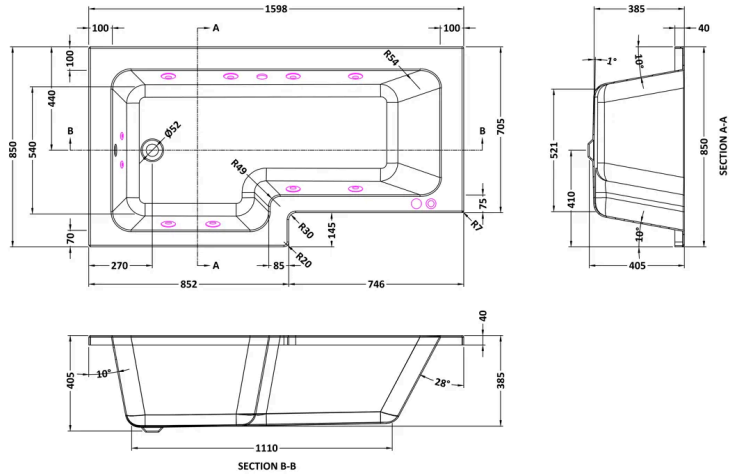

Product Dimensions

Product	405 x 850 x 1600mm (H x W x L)
Packaged	425 x 850 x 1600mm (H x W x D)
Nett Weight	35 kg
Packaged Weight	35 kg

Packaging Details

Label Size (mm)	35 x 300
Label Colour	White
Label Qty	2.0000

Product Details

Volume	200 Litre
Country of Origin	United Kingdom
Product Material	Acrylic
Colour/Finish	White
Style	Contemporary
Fixings Included	No
Bath Panel Included	No
Ce Certified	Yes
Displaced Capacity	130 Litre
Hydrotherapy System	No
Includes Grips	No
Jet Finish	White
Leg Set Included	Yes
No. Of Large Jets	8
No. Of Tapholes	No Tapholes
Overflow Included	Yes
Tap Included	No
Waste Included	No

© ROXOR Group