Sales Code: WBA814BB-HY

Barcode: 5064007034005

Brand: nuie Choice

Description: nuie choice 1800mm Thin Edge Hydrotherapy Brushed Brass Whirlpool Shower Bath

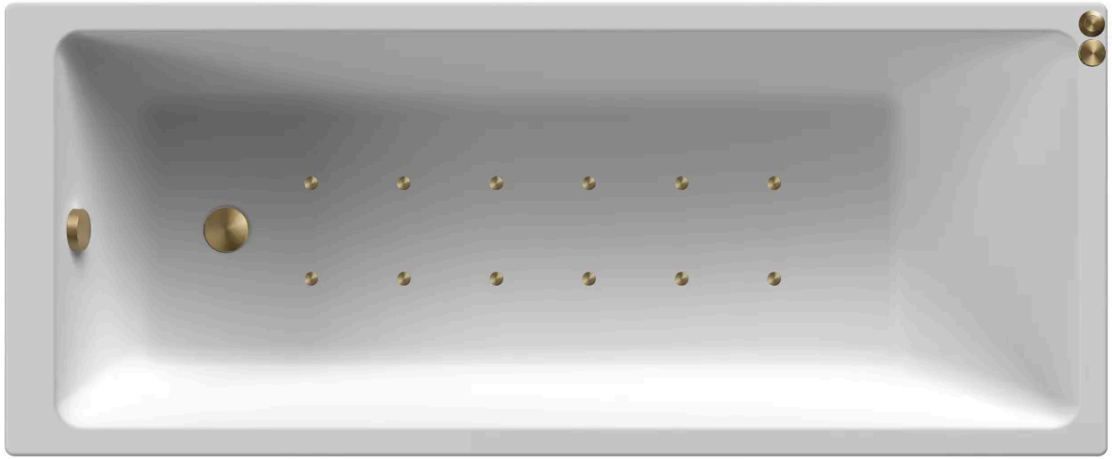

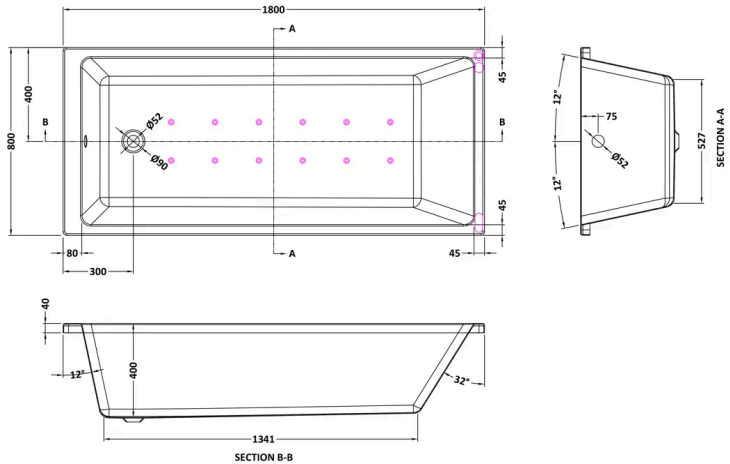

Product Dimensions

Product	400 x 800 x 1800mm (H x W x L)
Packaged	420 x 810 x 1870mm (H x W x D)
Nett Weight	31 kg
Packaged Weight	31 kg

Packaging Details

Label Size (mm)	38 x 192
Label Colour	White
Label Qty	2.0000

Product Details

Volume	250 Litre
Country of Origin	United Kingdom
Product Material	Acrylic
Colour/Finish	Brushed Brass
Style	Contemporary
Fixings Included	No
Bath Panel Included	No
Ce Certified	Yes
Displaced Capacity	180 Litre
Hydrotherapy System	Yes
Includes Grips	No
Jet Finish	Brushed Brass
Leg Set Included	Yes
No. Of Tapholes	No Tapholes
Overflow Included	Yes
Tap Included	No
Waste Included	No

© ROXOR Group