Sales Code: WBA710MB-J6

Barcode: 5064007035439

Brand: nuie Choice

Description: nuie choice 1700mm Single Ended Straight 6 Matt Black Jet Whirlpool Shower Bath

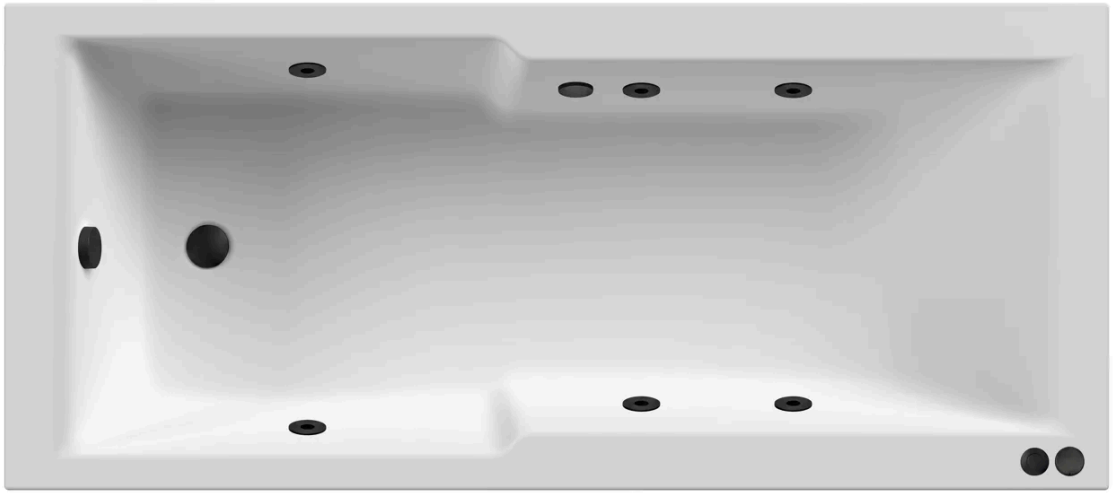

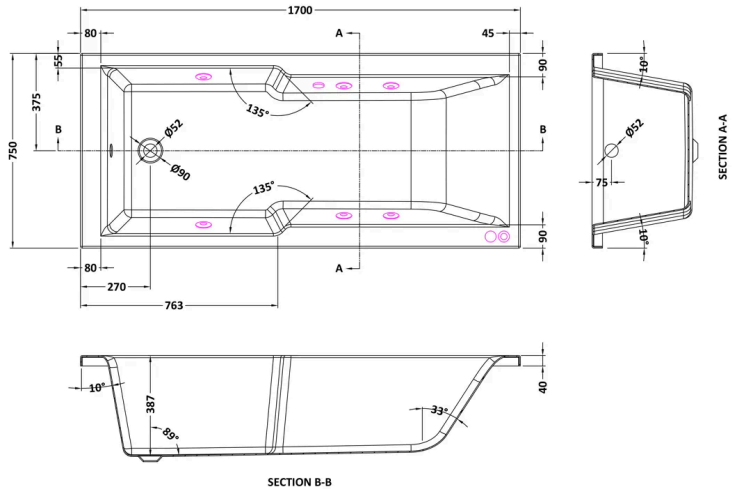

Product Dimensions

Product	400 x 750 x 1700mm (H x W x L)
Packaged	400 x 760 x 1700mm (H x W x D)
Nett Weight	29.5 kg
Packaged Weight	29.5 kg

Packaging Details

Box Qty	1
Label Size (mm)	50 x 100
Label Colour	White
Label Qty	2.0000

Product Details

Volume	190 Litre
Country of Origin	United Kingdom
Product Material	Acrylic
Colour/Finish	Matt Black
Style	Contemporary
Fixings Included	No
Bath Panel Included	No
Ce Certified	Yes
Displaced Capacity	120 Litre
Hydrotherapy System	No
Includes Grips	No
Jet Finish	Matt Black
Leg Set Included	Yes
No. Of Large Jets	6
No. Of Tapholes	No Tapholes
Overflow Included	Yes
Tap Included	No
Waste Included	No

© ROXOR Group