Sales Code: WBA605WH-J6 **Barcode:** 5064007036603 **Brand:** nuie Choice **Description:** nuie choice 1500mm Single Ended 6 White Jet Whirlpool Bath



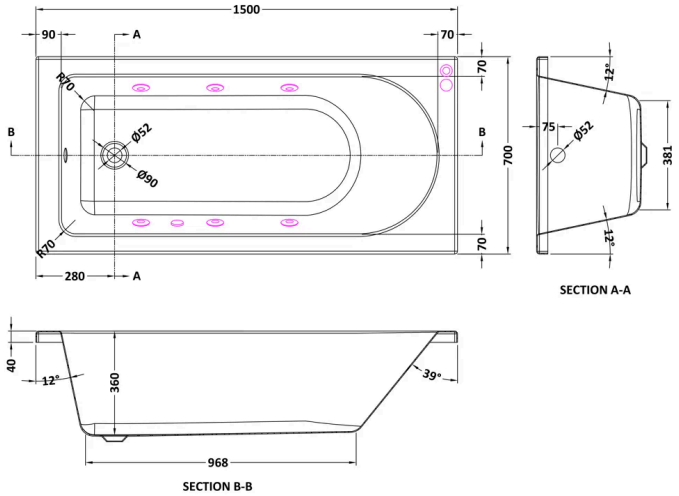

Product Dimensions

Product	355 x 700 x 1500mm (H x W x L)
Packaged	400 x 715 x 1505mm (H x W x D)
Nett Weight	26.5 kg
Packaged Weight	26.5 kg

Packaging Details

Box Qty	1
Label Size (mm)	50 x 100
Label Colour	White
Label Qty	2.0000

Product Details

Volume	168 Litre
Country of Origin	United Kingdom
Product Material	Acrylic
Colour/Finish	White
Style	Contemporary
Fixings Included	No
Bath Panel Included	No
Ce Certified	Yes
Displaced Capacity	98 Litre
Hydrotherapy System	No
Includes Grips	No
Jet Finish	White
Leg Set Included	Yes
No. Of Large Jets	6
No. Of Tapholes	No Tapholes
Overflow Included	Yes
Tap Included	No
Waste Included	No

© ROXOR Group