Sales Code: WBA414WH-J10L **Barcode:** 5064007036399 **Brand:** nuie Choice **Description:** nuie choice 1800mm Single Ended 10 White Jet Whirlpool Bath With Light



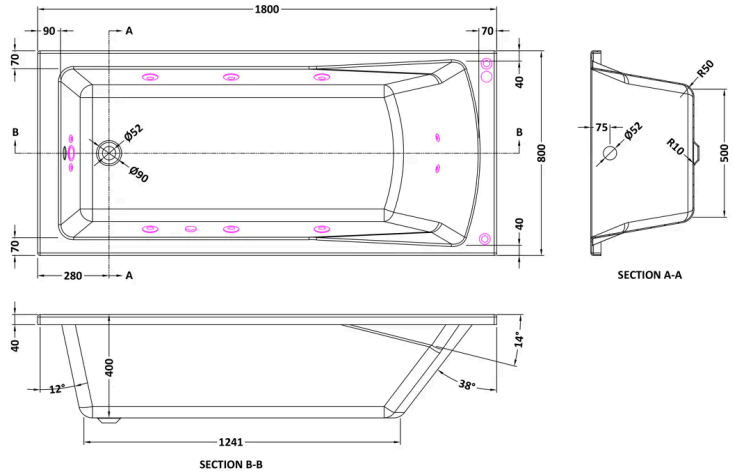

Product Dimensions

Product	400 x 800 x 1800mm (H x W x L)
Packaged	380 x 800 x 1800mm (H x W x D)
Nett Weight	32.35 kg
Packaged Weight	32.35 kg

Packaging Details

Label Size (mm)	50 x 100
Label Colour	White
Label Qty	2.0000

Product Details

Volume	218 Litre
Country of Origin	United Kingdom
Product Material	Acrylic
Colour/Finish	White
Style	Contemporary
Fixings Included	No
Bath Panel Included	No
Ce Certified	Yes
Displaced Capacity	148 Litre
Hydrotherapy System	No
Includes Grips	No
Jet Finish	White
Leg Set Included	Yes
No. Of Large Jets	6
No. Of Micro Jets	4
No. Of Tapholes	No Tapholes
Overflow Included	Yes
Tap Included	No
Waste Included	No

© ROXOR Group