**Sales Code:** WBA409MB-J10 **Barcode:** 5064007034753 **Brand:** nuie Choice **Description:** nuie choice 1700mm Single Ended 10 Matt Black Jet Whirlpool Bath



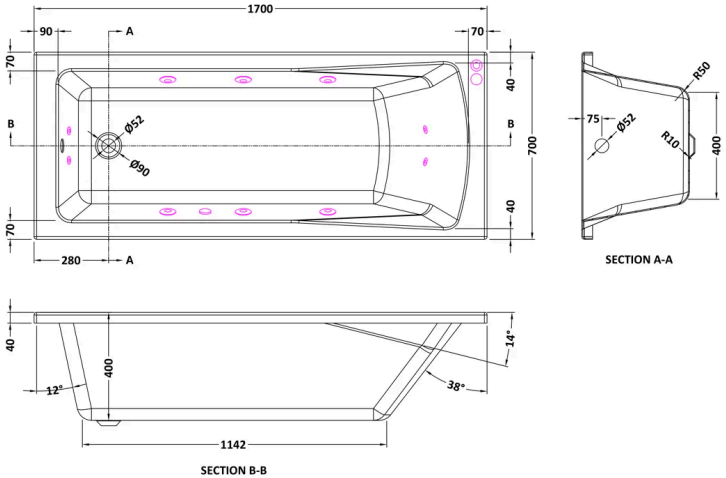


## Product Dimensions

| | |
|---|---|
| Product | 400 x 700 x 1700mm (H x W x L) |
| Packaged | 420 x 700 x 1700mm (H x W x D) |
| Nett Weight | 30.74 kg |
| Packaged Weight | 30.74 kg |

## Packaging Details

| | |
|---|---|
| Label Size (mm) | 50 x 100 |
| Label Colour | White |
| Label Qty | 2.0000 |

## Product Details

| | |
|---|---|
| Volume | 178 Litre |
| Country of Origin | United Kingdom |
| Product Material | Acrylic |
| Colour/Finish | Matt Black |
| Style | Contemporary |
| Fixings Included | No |
| Bath Panel Included | No |
| Ce Certified | Yes |
| Displaced Capacity | 108 Litre |
| Hydrotherapy System | No |
| Includes Grips | No |
| Jet Finish | Matt Black |
| Leg Set Included | Yes |
| No. Of Large Jets | 6 |
| No. Of Micro Jets | 4 |
| No. Of Tapholes | No Tapholes |
| Overflow Included | Yes |
| Tap Included | No |
| Waste Included | No |

© ROXOR Group