Sales Code: WBA409-J11HYL

Barcode: 5056817702342

Brand: nuie Choice

Description: nuie choice 1700mm Single Ended 11 Chrome Jet Hydrotherapy Whirlpool Bath With Light



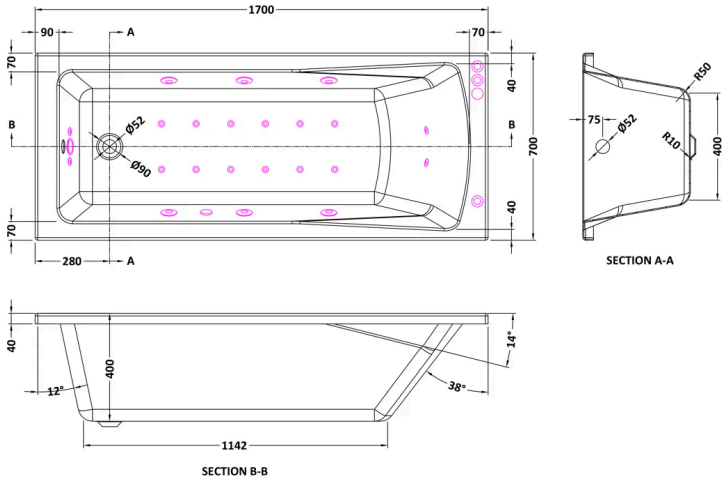

Product Dimensions

Product	400 x 700 x 400 x 1700mm (H x W x D x L)
Packaged	420 x 700 x 1700mm (H x W x D)
Nett Weight	37.09 kg
Packaged Weight	37.09 kg

Packaging Details

Label Size (mm)	50 x 100
Label Colour	White
Label Qty	2.0000

Product Details

Volume	178 Litre
Country of Origin	United Kingdom
Product Material	Acrylic
Colour/Finish	Chrome
Style	Contemporary
Fixings Included	No
Bath Panel Included	No
Ce Certified	Yes
Displaced Capacity	108 Litre
Hydrotherapy System	Yes
Includes Grips	No
Jet Finish	Chrome
Leg Set Included	Yes
No. Of Large Jets	6
No. Of Micro Jets	5
No. Of Tapholes	No Tapholes
Overflow Included	Yes
Tap Included	No
Waste Included	No

© ROXOR Group