**Sales Code:** WBA210WH-J12HY

**Barcode:** 5064007035989

**Brand:** nuie Choice

**Description:** nuie choice 1700mm Double Ended 12 White Jet Hydrotherapy Whirlpool Bath



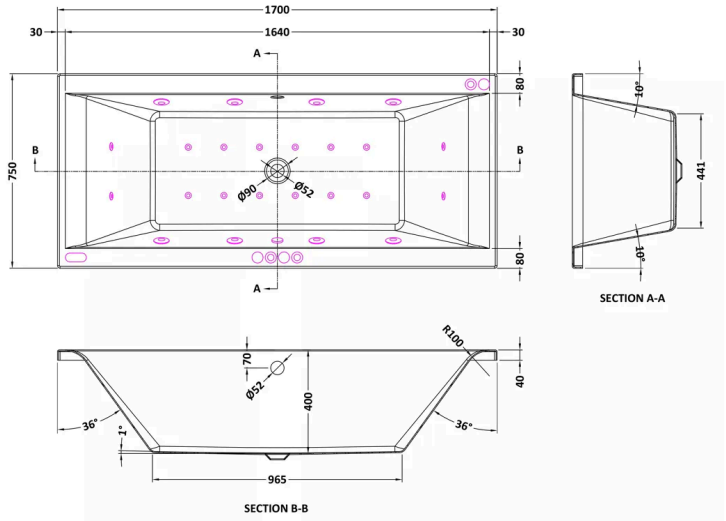


## Product Dimensions

| | |
|---|---|
| Product | 400 x 750 x 400 x 1700mm (H x W x D x L) |
| Packaged | 425 x 750 x 1700mm (H x W x D) |
| Nett Weight | 34 kg |
| Packaged Weight | 34 kg |

## Packaging Details

| | |
|---|---|
| Label Size (mm) | 50 x 100 |
| Label Colour | White |
| Label Qty | 2.0000 |

## Product Details

| | |
|---|---|
| Volume | 185 Litre |
| Country of Origin | United Kingdom |
| Product Material | Acrylic |
| Colour/Finish | White |
| Style | Contemporary |
| Fixings Included | No |
| Bath Panel Included | No |
| Ce Certified | Yes |
| Displaced Capacity | 115 Litre |
| Hydrotherapy System | Yes |
| Includes Grips | No |
| Jet Finish | White |
| Leg Set Included | Yes |
| No. Of Large Jets | 8 |
| No. Of Micro Jets | 4 |
| No. Of Tapholes | No Tapholes |
| Overflow Included | Yes |
| Tap Included | No |
| Waste Included | No |

© ROXOR Group