Sales Code: WBA1812MB-J18HYL

Barcode: 5064007035620

Brand: nuie Choice

Description: nuie choice 1800mm Inset Double Ended 18 Matt Black Jet Hydrotherapy Whirlpool Bath With Light

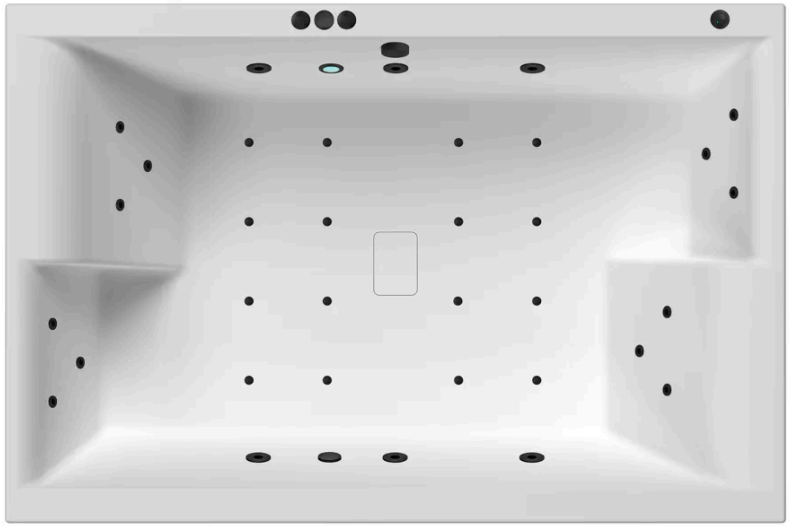

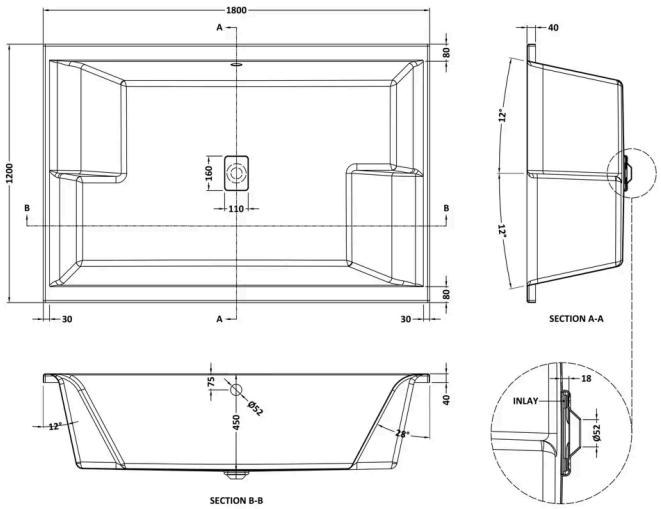

Product Dimensions

Product	630 x 1200 x 630 x 1800mm (H x W x D x L)
Packaged	630 x 1200 x 1800mm (H x W x D)
Nett Weight	87.71 kg
Packaged Weight	87.71 kg

Packaging Details

Label Size (mm)	38 x 192
Label Colour	White
Label Qty	1.0000

Product Details

Volume	440 Litre
Country of Origin	United Kingdom
Product Material	Acrylic
Colour/Finish	Matt Black
Style	Contemporary
Fixings Included	No
Bath Panel Included	No
Ce Certified	Yes
Displaced Capacity	370 Litre
Hydrotherapy System	Yes
Includes Grips	No
Jet Finish	Matt Black
Leg Set Included	Yes
No. Of Large Jets	6
No. Of Micro Jets	12
No. Of Tapholes	No Tapholes
Overflow Included	Yes
Tap Included	No
Waste Included	No

© ROXOR Group