Sales Code: WBA020-HY

Barcode: 5056817702793

Brand: nuie Choice

Description: nuie choice 1700mm Back to Wall Double Ended Hydrotherapy Chrome Whirlpool Bath



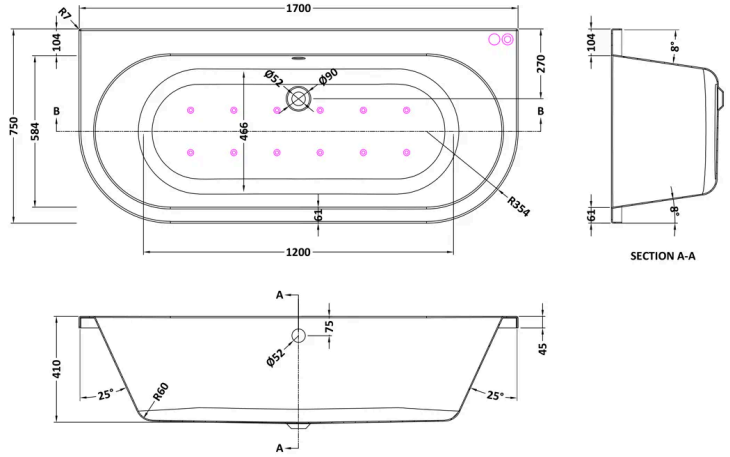

Product Dimensions

Product	390 x 750 x 1700mm (H x W x L)
Packaged	390 x 800 x 1700mm (H x W x D)
Nett Weight	30.5 kg
Packaged Weight	30.5 kg

Packaging Details

Label Size (mm)	38 x 192
Label Colour	White
Label Qty	2.0000

Product Details

Volume	200 Litre
Country of Origin	United Kingdom
Product Material	Acrylic
Colour/Finish	Chrome
Style	Contemporary
Fixings Included	No
Bath Panel Included	No
Ce Certified	Yes
Displaced Capacity	130 Litre
Hydrotherapy System	Yes
Includes Grips	No
Jet Finish	Chrome
Leg Set Included	Yes
No. Of Tapholes	No Tapholes
Overflow Included	Yes
Tap Included	No
Waste Included	No

© ROXOR Group