Sales Code: WAS222N **Barcode:** 5056817730666 **Brand:** BC Designs **Description:** BC Sanitan Nickel Push Button Slotted Basin Waste



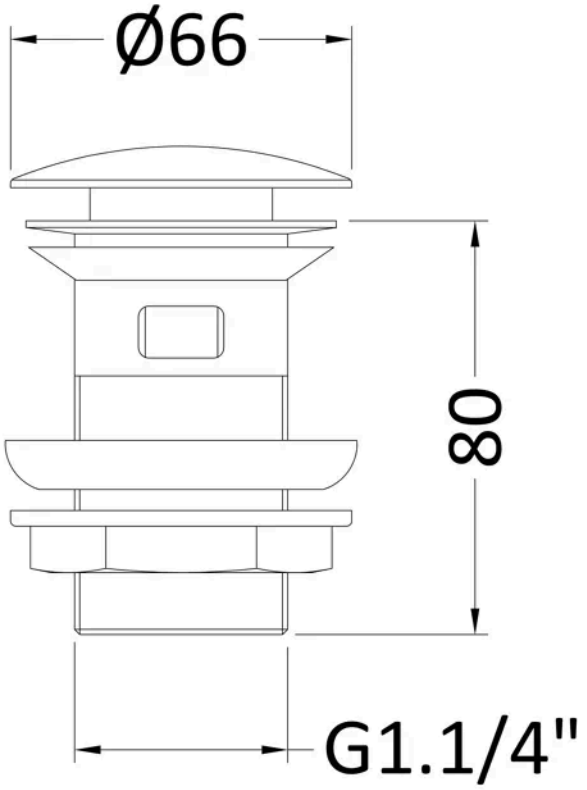

Product Dimensions

Product	61 x 61 x 97mm (H x W x D)
Packaged	100 x 65 x 65mm (H x W x D)
Nett Weight	0.3 kg
Packaged Weight	0.3 kg

Product Details

Country of Origin	China
Product Material	Brass
Waste Type	Push Button
Colour/Finish	Nickel
Style	Contemporary
Waste Shape	Round

© ROXOR Group