**Sales Code:** WAS222G **Barcode:** 5056817730642 **Brand:** BC Designs **Description:** BC Sanitan Gold Push Button Slotted Basin Waste



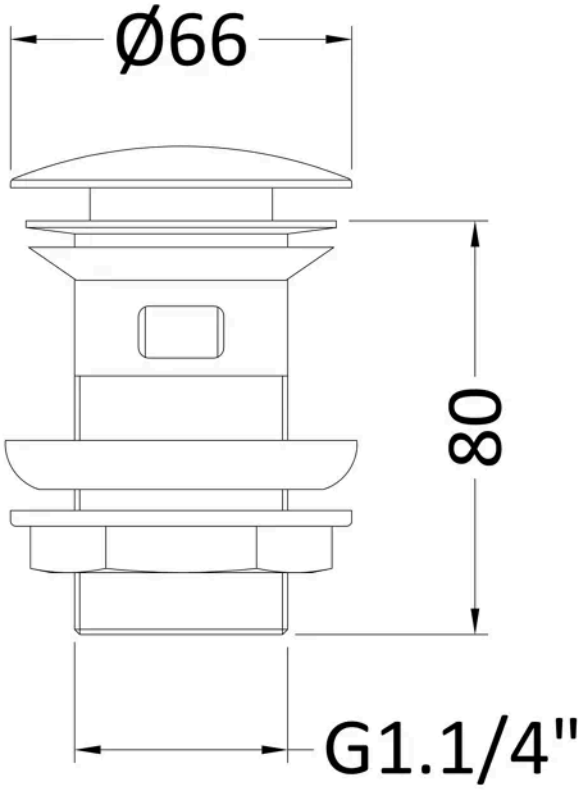


## Product Dimensions

| | |
|---|---|
| Product | 61 x 61 x 97mm (H x W x D) |
| Packaged | 100 x 65 x 65mm (H x W x D) |
| Nett Weight | 0.3 kg |
| Packaged Weight | 0.3 kg |

## Product Details

| | |
|---|---|
| Country of Origin | China |
| Product Material | Brass |
| Waste Type | Push Button |
| Colour/Finish | Gold |
| Style | Contemporary |
| Waste Shape | Round |

© ROXOR Group