Sales Code: WAS222BCO **Barcode:** 5056817730604 **Brand:** BC Designs **Description:** BC Designs Brushed Copper Push Button Slotted Basin Waste



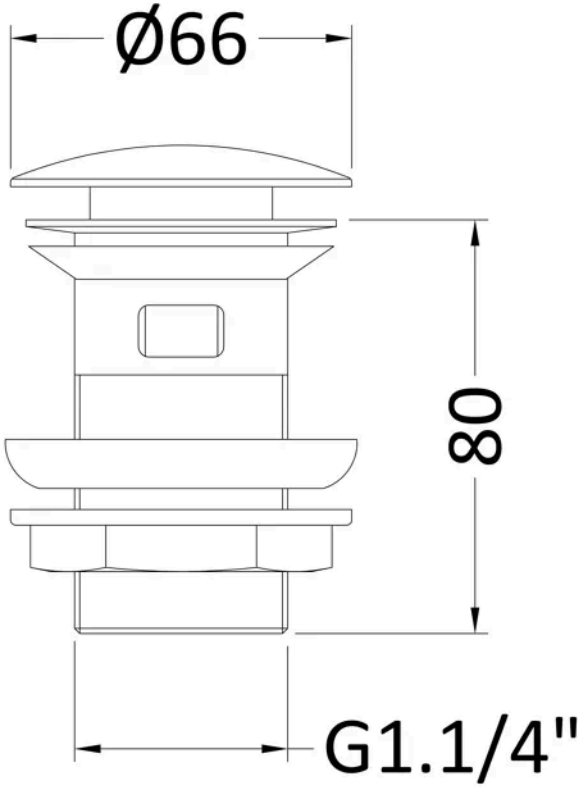

Product Dimensions

Product	61 x 61 x 97mm (H x W x D)
Packaged	100 x 65 x 65mm (H x W x D)
Nett Weight	0.3 kg
Packaged Weight	0.3 kg

Product Details

Country of Origin	China
Product Material	Brass
Waste Type	Push Button
Colour/Finish	Brushed Copper
Style	Contemporary

© ROXOR Group