Sales Code: WAS222BC **Barcode:** 5056817730598 **Brand:** BC Designs **Description:** BC Sanitan Brushed Chrome Push Button Slotted Basin Waste



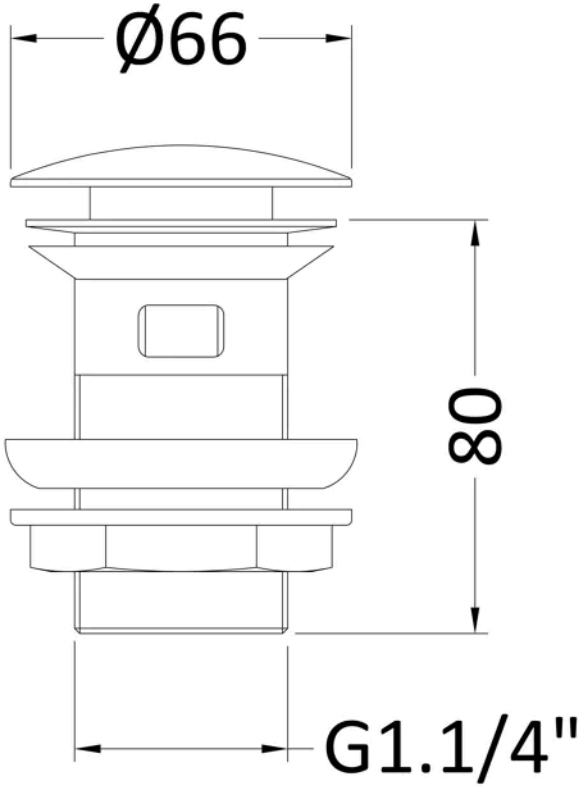

Product Dimensions

Product	61 x 61 x 97mm (H x W x D)
Packaged	100 x 65 x 65mm (H x W x D)
Nett Weight	0.3 kg
Packaged Weight	0.3 kg

Product Details

Country of Origin	China
Product Material	Brass
Waste Type	Push Button
Colour/Finish	Brushed Chrome
Style	Contemporary
Waste Shape	Round

© ROXOR Group