Sales Code: WAS220RB **Barcode:** 5056883745168 **Brand:** BC Designs **Description:** BC Sanitan BC Designs Rose Bloom Push Button Unslotted Basin Waste



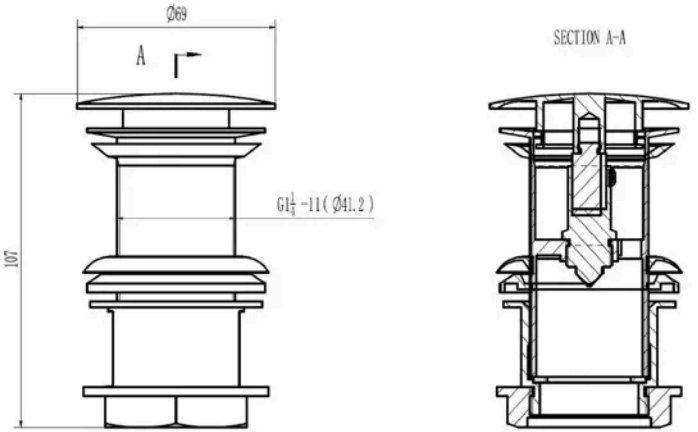

Product Dimensions

Packaged	75 x 75 x 105mm (H x W x D)
Nett Weight	0.35 kg
Packaged Weight	0.35 kg

Packaging Details

Box Qty	1

Product Details

Country of Origin	United Kingdom
Product Material	Brass
Waste Type	Push Button
Colour/Finish	Rose Bloom
Style	Contemporary
Waste Shape	Round

© ROXOR Group