Sales Code: WAS220PW **Barcode:** 5056462639536 **Brand:** BC Designs **Description:** BC Sanitan BC Designs Polished White Push Button Unslotted Basin Waste



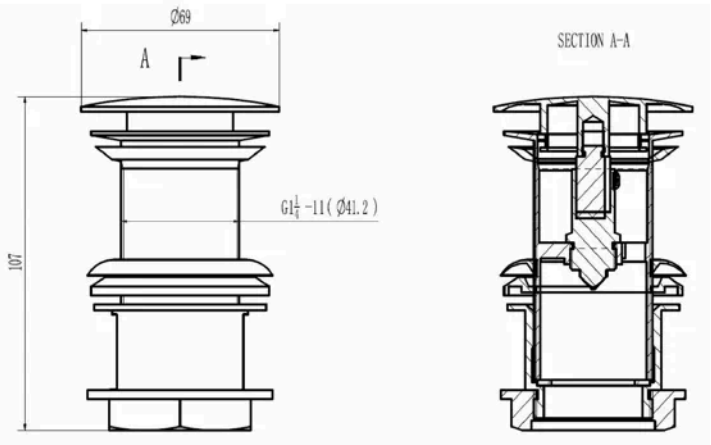

Product Dimensions

Packaged	75 x 75 x 105mm (H x W x D)
Nett Weight	0.35 kg
Packaged Weight	0.35 kg

Packaging Details

Box Qty	1

Product Details

Country of Origin	South Africa
Product Material	Brass
Waste Type	Push Button
Colour/Finish	Polished White
Style	Contemporary

© ROXOR Group