Sales Code: WAS220PG **Barcode:** 5056462609492 **Brand:** BC Designs **Description:** BC Sanitan BC Designs Powder Grey Pop Up Unslotted Basin Waste



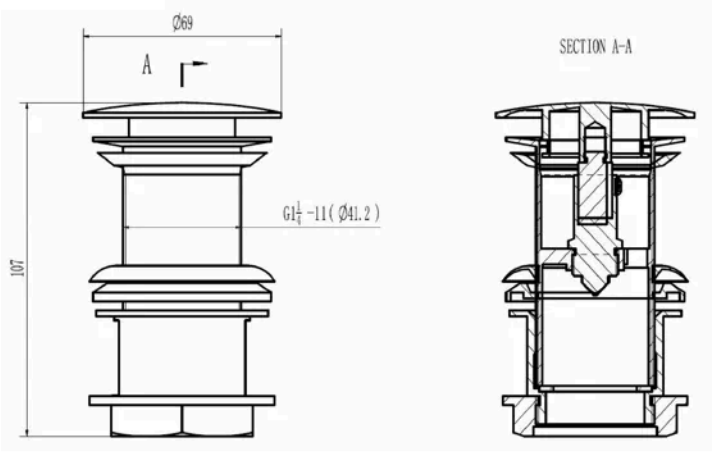

Product Dimensions

Packaged	75 x 75 x 105mm (H x W x D)
Nett Weight	0.35 kg
Packaged Weight	0.35 kg

Packaging Details

Box Qty	1

Product Details

Country of Origin	South Africa
Product Material	Brass
Waste Type	Pop-Up
Colour/Finish	Powder Grey
Style	Contemporary

© ROXOR Group