Sales Code: WAS220KG **Barcode:** 5056462609461 **Brand:** BC Designs **Description:** Basin Wastes Push Down Basin Waste (Unslotted)



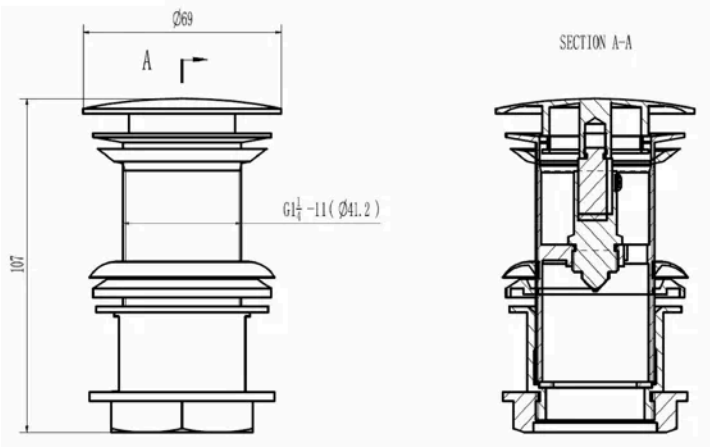

Product Dimensions

Packaged	75 x 75 x 105mm (H x W x D)
Nett Weight	0.35 kg
Packaged Weight	0.35 kg

Product Details

Country of Origin	South Africa
Product Material	Brass
Waste Type	Push Button
Colour/Finish	Khaki Green
Style	Contemporary

© ROXOR Group