Sales Code: WAS220 **Barcode:** 5056462609416 **Brand:** BC Designs **Description:** BC Sanitan BC Designs Chrome Push Button Unslotted Basin Waste



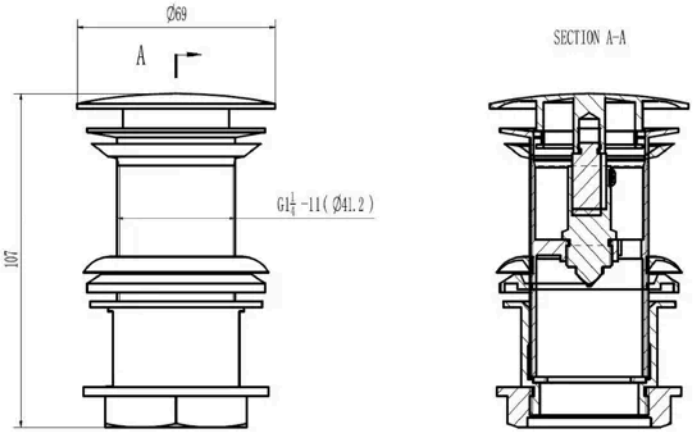

Product Dimensions

Packaged	75 x 75 x 105mm (H x W x D)
Nett Weight	0.35 kg
Packaged Weight	0.35 kg

Product Details

Country of Origin	United Kingdom
Product Material	Brass
Waste Type	Push Button
Colour/Finish	Chrome
Style	Contemporary
Waste Shape	Round

© ROXOR Group