Sales Code: WAS219G **Barcode:** 5056462618852 **Brand:** BC Designs **Description:** BC Sanitan Gold Plug and Link Chain Basin Waste



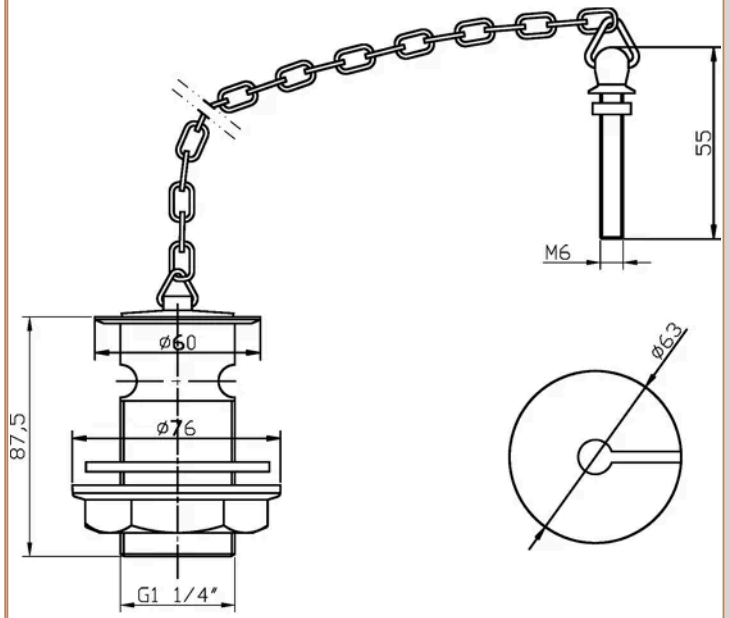

Product Dimensions

Product	88 x 60 x 60mm (H x W x D)
Packaged	100 x 70 x 70mm (H x W x D)
Nett Weight	0.28 kg
Packaged Weight	0.28 kg

Product Details

Country of Origin	China
Product Material	Brass
Waste Type	Plug / Chain
Colour/Finish	Gold
Style	Traditional
Waste Shape	Round

© ROXOR Group