Sales Code: WAS219BCO **Barcode:** 5056462618814 **Brand:** BC Designs **Description:** BC Designs Brushed Copper Plug and Chain Basin Waste



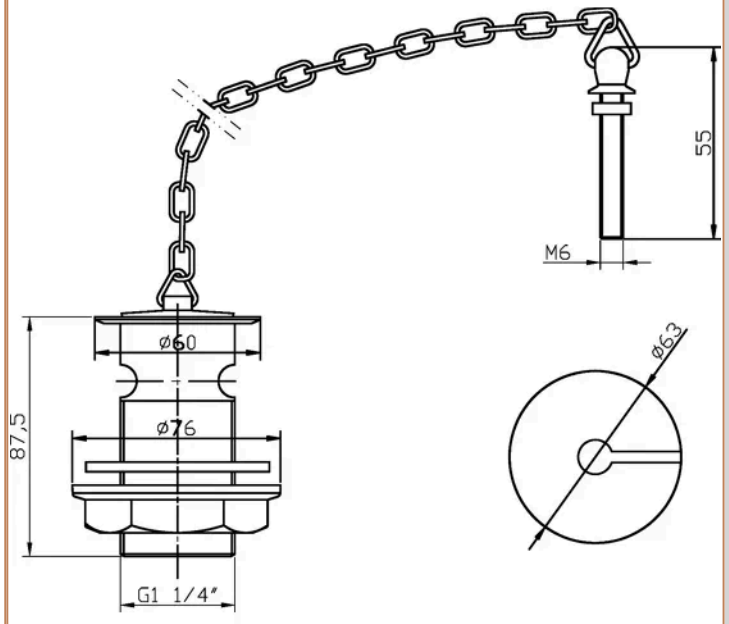

Product Dimensions

Product	88 x 60 x 60mm (H x W x D)
Packaged	100 x 70 x 70mm (H x W x D)
Nett Weight	0.28 kg
Packaged Weight	0.28 kg

Product Details

Country of Origin	China
Product Material	Brass
Waste Type	Plug / Chain
Colour/Finish	Brushed Copper
Style	Traditional

© ROXOR Group