Sales Code: WAS110MW **Barcode:** 5056462609249 **Brand:** BC Designs **Description:** BC Designs Matt White 60mm Push Button Unslotted Bath Waste



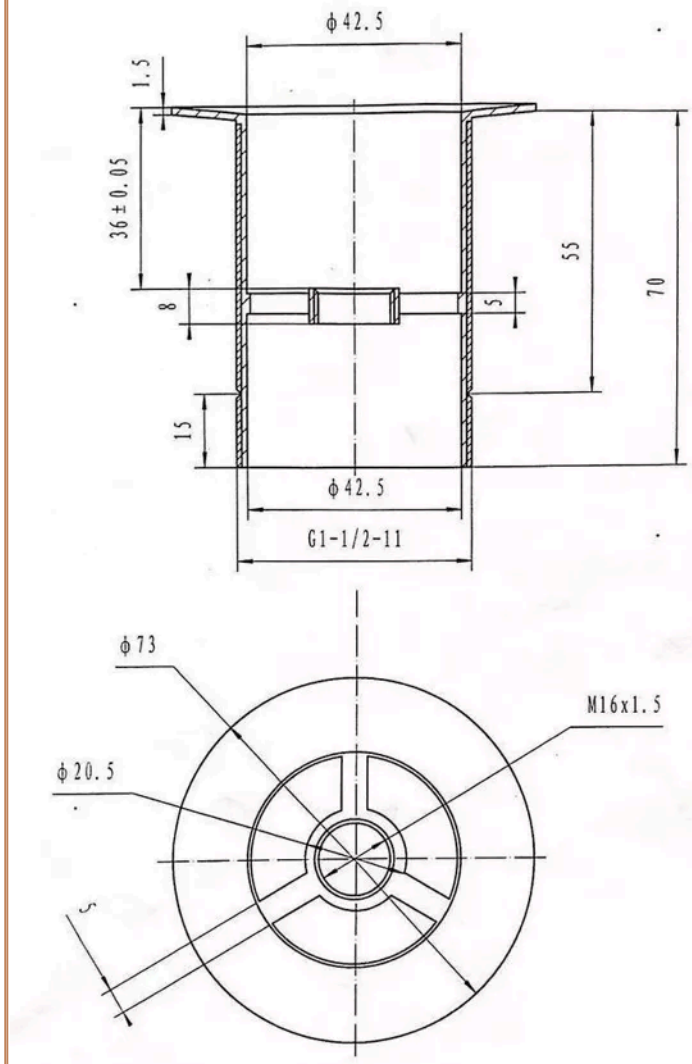

Product Dimensions

Packaged	75 x 75 x 105mm (H x W x D)
Nett Weight	0.35 kg
Packaged Weight	0.35 kg

Packaging Details

Box Qty	1

Product Details

Country of Origin	South Africa
Product Material	Brass
Waste Type	Push Button
Colour/Finish	Matt White
Style	Contemporary

© ROXOR Group