Sales Code: WAS110BC **Barcode:** 5056462639512 **Brand:** BC Designs **Description:** BC Designs Brushed Chrome 60mm Push Button Unslotted Bath Waste



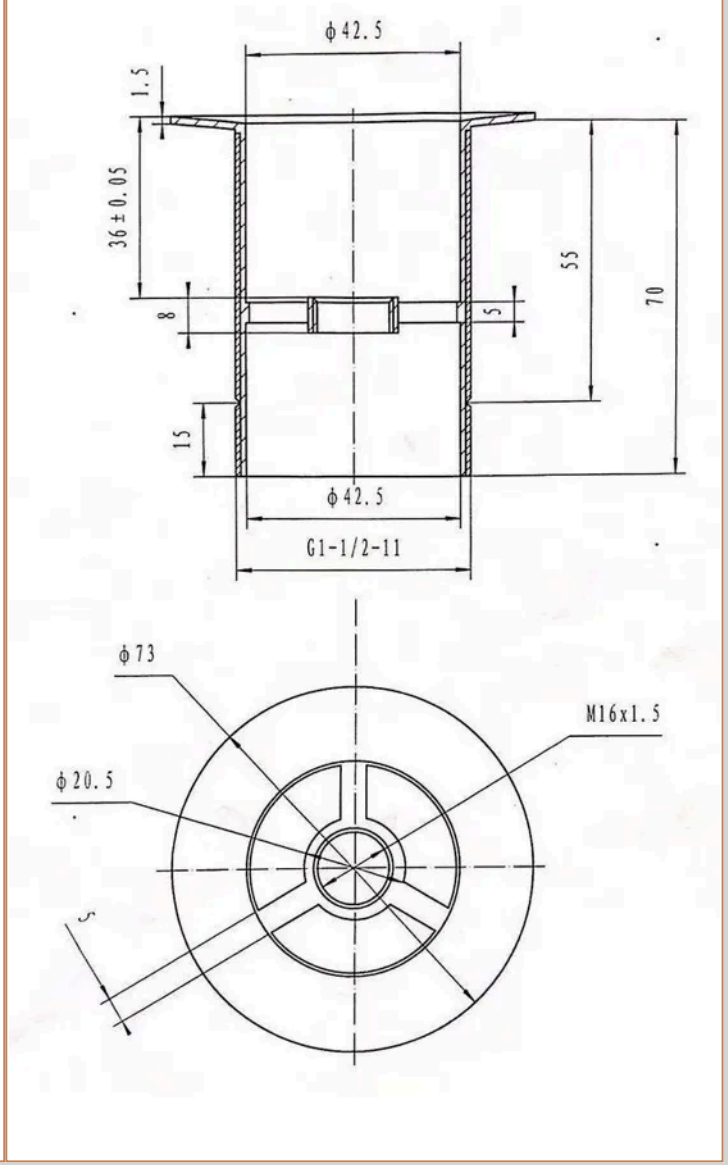

Product Dimensions

Packaged	75 x 75 x 105mm (H x W x D)
Nett Weight	0.35 kg
Packaged Weight	0.35 kg

Product Details

Country of Origin	United Kingdom
Product Material	Brass
Waste Type	Push Button
Colour/Finish	Brushed Chrome
Style	Contemporary
Waste Shape	Round

© ROXOR Group