Sales Code: WAS110 **Barcode:** 5056462609232 **Brand:** BC Designs **Description:** BC Designs Chrome 60mm Push Button Unslotted Bath Waste



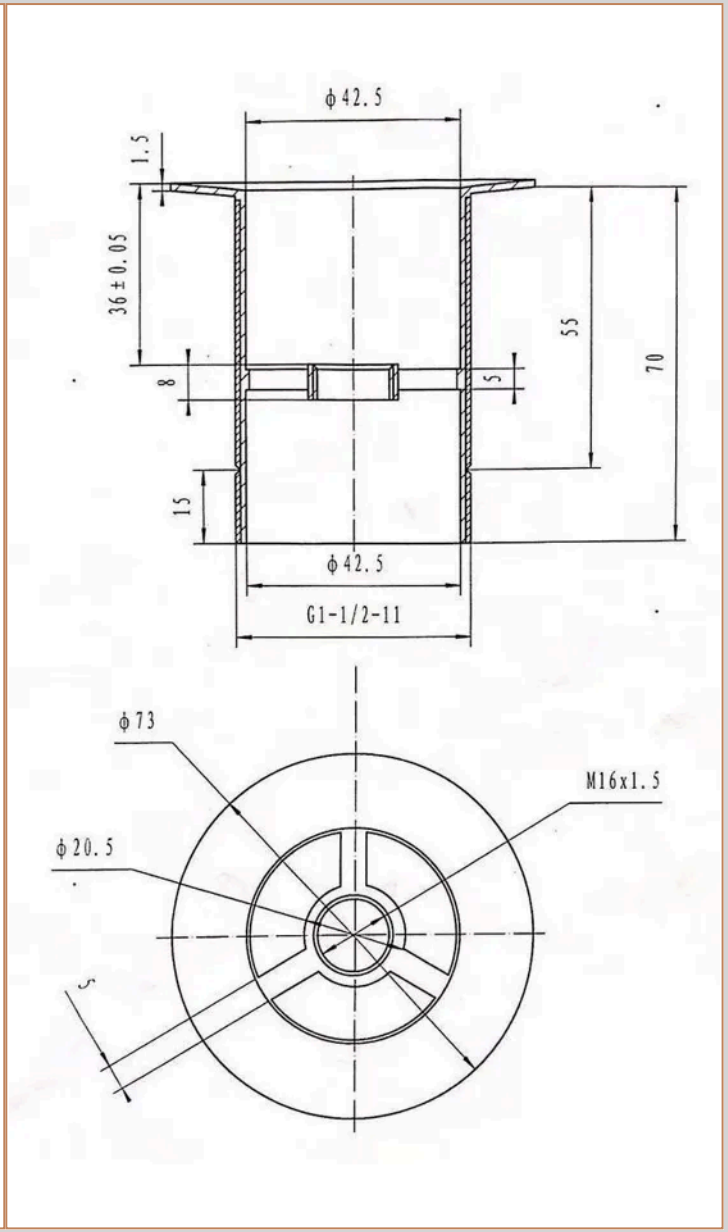

Product Dimensions

Packaged	75 x 75 x 105mm (H x W x D)
Nett Weight	0.35 kg
Packaged Weight	0.35 kg

Packaging Details

Box Qty	1

Product Details

Country of Origin	United Kingdom
Product Material	Brass
Waste Type	Push Button
Colour/Finish	Chrome
Style	Contemporary
Waste Shape	Round

© ROXOR Group