Sales Code: WAS107ME **Barcode:** 5056462688343 **Brand:** BC Designs **Description:** BC Designs Marble 70mm Push Button Slotted Bath Waste



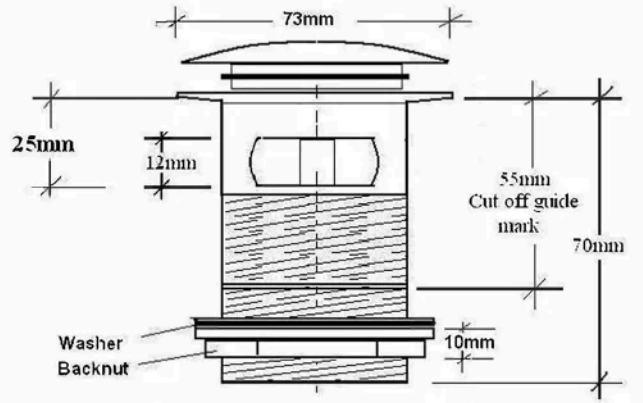

Marked as guide at 55mm in case the body needs length reduced

Product Dimensions

Packaged	75 x 75 x 105mm (H x W x D)
Nett Weight	0.35 kg
Packaged Weight	0.35 kg

Product Details

Country of Origin	South Africa
Product Material	Brass
Waste Type	Push Button
Colour/Finish	Marble
Style	Contemporary

© ROXOR Group