Sales Code: VCTCP105BG **Barcode:** 5056462663098 **Brand:** BC Designs **Description:** BC Sanitan Brushed Gold Ceramic Cistern Plate



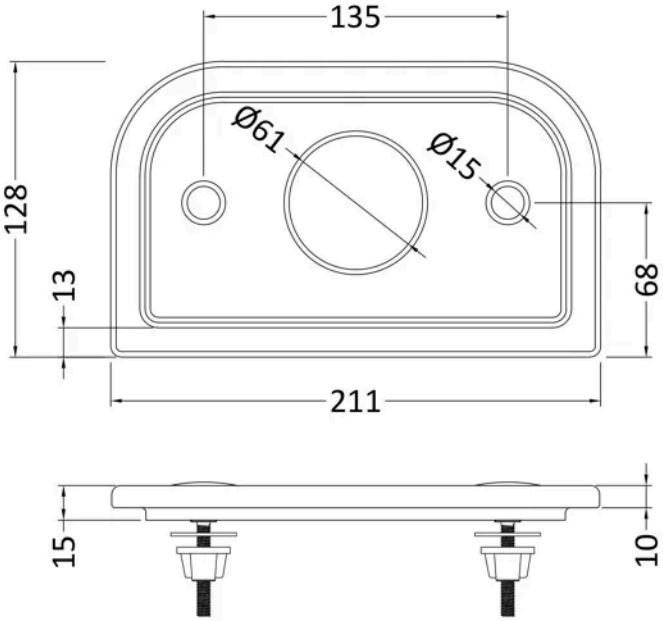

Product Dimensions

Product	50 x 210 x 126mm (H x W x D)
Packaged	95 x 75 x 260mm (H x W x D)
Nett Weight	1 kg
Packaged Weight	1 kg

Product Details

Country of Origin	China
Product Material	Brass
Colour/Finish	Brushed Gold
Style	Traditional

© ROXOR Group