Sales Code: VCTCP105 **Barcode:** 5056211884842 **Brand:** BC Designs **Description:** BC Sanitan Chrome Ceramic Cistern Plate



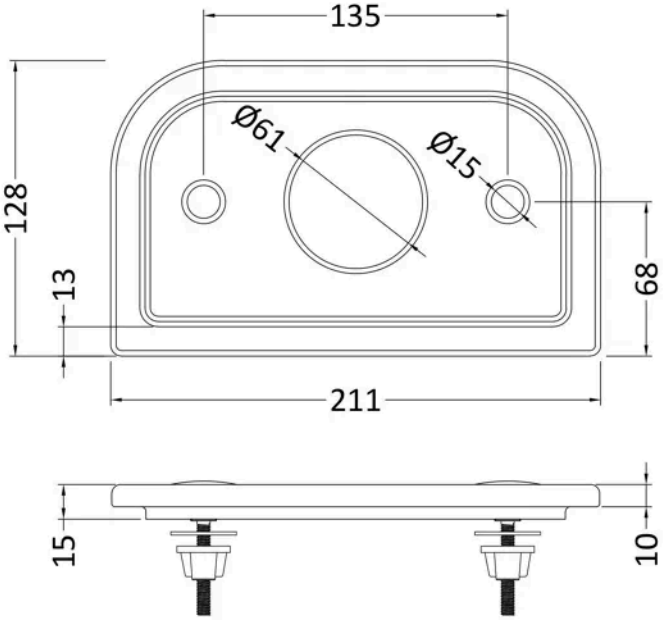

Product Dimensions

Product	50 x 210 x 126mm (H x W x D)
Packaged	95 x 75 x 260mm (H x W x D)
Nett Weight	1 kg
Packaged Weight	1 kg

Product Details

Country of Origin	China
Product Material	Ceramic
Colour/Finish	Chrome
Style	Traditional

© ROXOR Group