Sales Code: VCCL001G **Barcode:** 5056462624792 **Brand:** BC Designs **Description:** BC Sanitan Gold Lever Handle for Close Coupled/Low Level Cistern



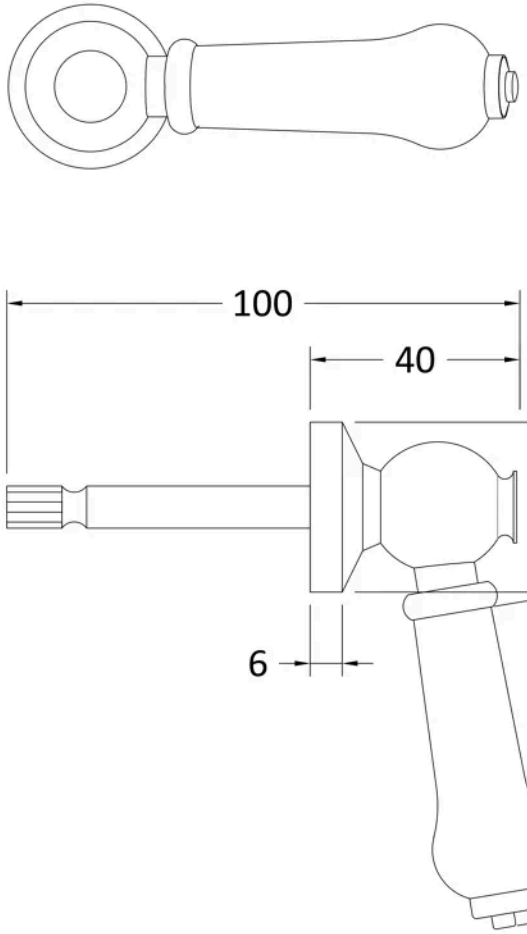

Product Dimensions

Product	165 x 32 x 99mm (H x W x D)
Packaged	30 x 110 x 180mm (H x W x D)
Nett Weight	0.2 kg
Packaged Weight	0.3 kg

Packaging Details

Label Size (mm)	50 x 100
Label Colour	White
Label Qty	2.0000

Product Details

Country of Origin	China
Product Material	Brass Ceramic
Colour/Finish	Gold
Style	Traditional
Product Diameter	32 mm

© ROXOR Group