Sales Code: URB803G

Barcode: 5056462674490

Brand: Hudson Reed

Description: Hudson Reed Urban Satin Green 600mm 2 Door 1 Drawer Floor Standing Vanity Unit With U-Shaped Curved Basin



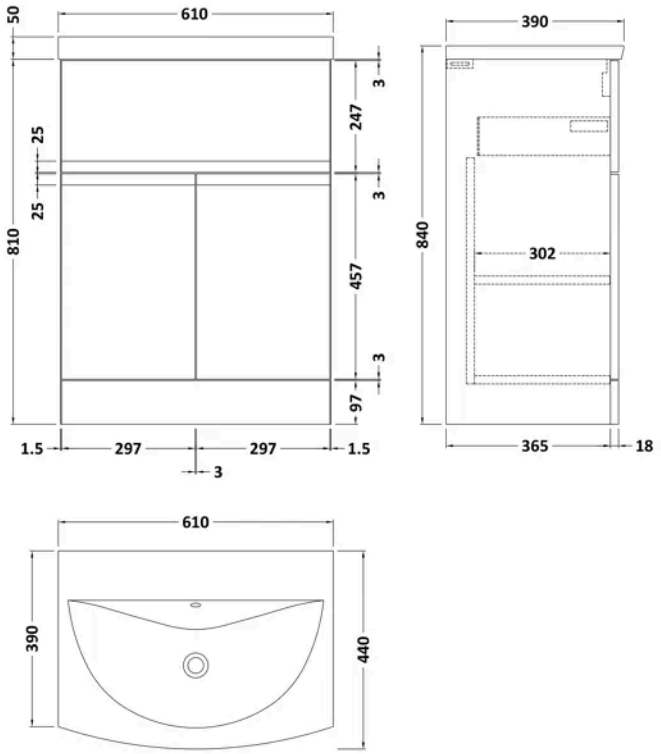

Product Dimensions

Product	835 x 610 x 440mm (H x W x D)
Nett Weight	29 kg
Packaged Weight	29.5 kg

Packaging Details

Box Qty	2

Product Details

Country of Origin	China
Product Material	Mfc Painted Matt
Colour/Finish	Satin Green
Mount Type	Floor
Style	Contemporary
Handle Type	Handleless
Construction Method	Cam & Wood Dowel
Construction Type	Rigid
Drawer Type	80mm High Metal Soft-close
Fascia Finish	Mdf Painted Matt
Fsc Certified	Yes
Handles Included	No
Inner Bowl Height	125 mm
Leg Set Included	No
Material Thickness	18 mm
No. Doors	2
No. Drawers	1
No. Of Tapholes	1
No. Shelves	1
Number Of Bowls	1
Number Of Shelves	1
Overflow Included	Yes
Tap Included	No
Waste Included	No
Waste Shroud	Yes

© ROXOR Group

Sales Code: NVM043 **Barcode:** 5056462620961 **Brand:** nuie **Description:** 1 Tap Hole 600mm Curved Ceramic Basin



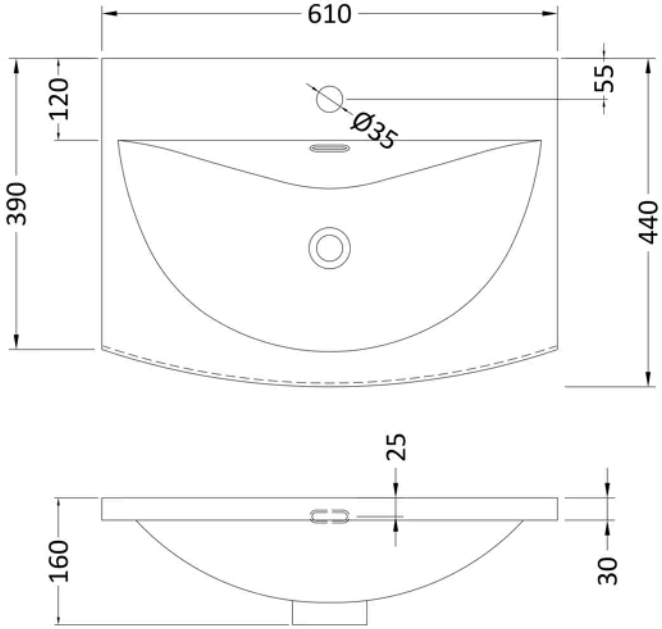

Product Dimensions

Product	160 x 610 x 440mm (H x W x D)
Packaged	190 x 630 x 415mm (H x W x D)
Nett Weight	11 kg
Packaged Weight	11.5 kg

Packaging Details

Box Qty	1

Product Details

Country of Origin	China
Product Material	Vitreous China
Colour/Finish	White
Style	Contemporary
Ce Certified	Yes
Inner Bowl Height	125 mm
No. Of Tapholes	1
Number Of Bowls	1
Overflow Included	Yes
Tap Included	No
Waste Included	No

© ROXOR Group

Sales Code: URB826 **Barcode:** 5056462659725 **Brand:** Hudson Reed **Description:** Hudson Reed Urban 600mm 2-Door Floor Standing Vanity Unit 2-Door/Drawer



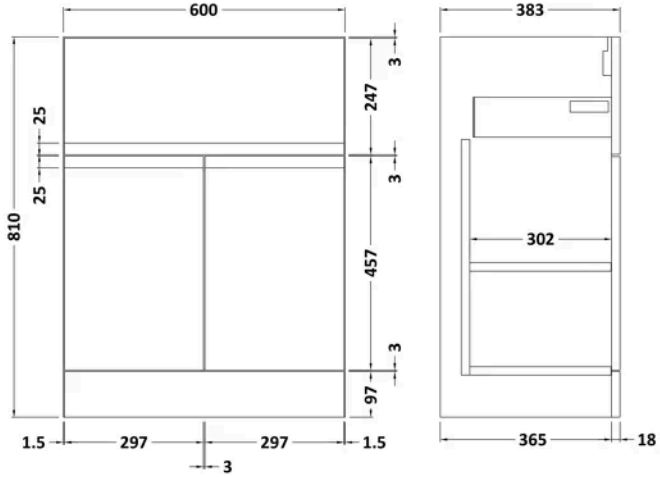

Product Dimensions

Product	810 x 610 x 383mm (H x W x D)
Packaged	780 x 595 x 383mm (H x W x D)
Nett Weight	18.5 kg
Packaged Weight	19 kg

Packaging Details

Box Qty	1

Product Details

Country of Origin	China
Product Material	Mdf Painted Matt
Colour/Finish	Satin Green
Mount Type	Floor
Style	Contemporary
Construction Method	Cam & Wood Dowel
Construction Type	Rigid
Fascia Finish	Mdf Painted Matt
Handles Included	No
Material Thickness	18 mm
No. Doors	2

© ROXOR Group