Sales Code: URB802D

Barcode: 5056462674391

Brand: Hudson Reed

Description: Hudson Reed Urban Satin Green 500mm 2 Drawer Wall Hung Vanity Unit With Thin Edge Basin



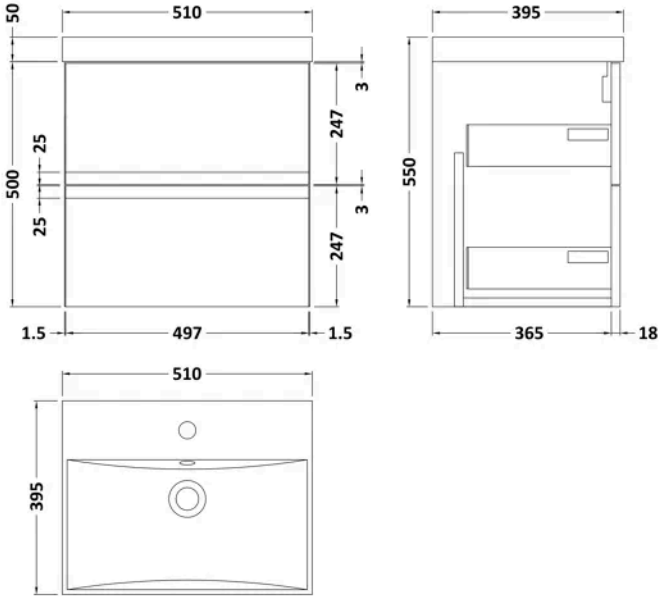

Product Dimensions

Product	550 x 510 x 395mm (H x W x D)
Nett Weight	27.5 kg
Packaged Weight	28 kg

Packaging Details

Box Qty	2

Product Details

Country of Origin	China
Product Material	Mfc Painted Matt
Colour/Finish	Satin Green
Mount Type	Wall Hung
Style	Contemporary
Handle Type	Handleless
Construction Method	Cam & Wood Dowel
Construction Type	Rigid
Drawer Type	80mm High Metal Soft-close
Fascia Finish	Mdf Painted Matt
Fsc Certified	Yes
Handles Included	No
Inner Bowl Height	125 mm
Leg Set Included	No
Material Thickness	18 mm
No. Drawers	2
No. Of Tapholes	1
Number Of Bowls	1
Overflow Included	Yes
Tap Included	No
Waste Included	No
Waste Shroud	Yes

© ROXOR Group

Sales Code: NVM032 **Barcode:** 5056211853411 **Brand:** nuie **Description:** 1 Tap Hole 500mm Thin Edge Ceramic Basin



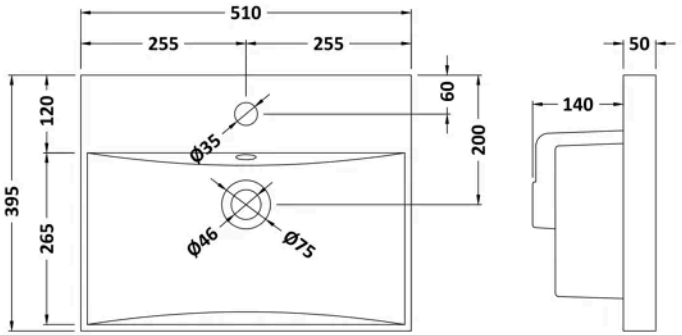

Product Dimensions

Product	190 x 510 x 395mm (H x W x D)
Packaged	190 x 530 x 415mm (H x W x D)
Nett Weight	9.5 kg
Packaged Weight	10 kg

Packaging Details

Box Qty	1

Product Details

Country of Origin	China
Product Material	Vitreous China
Colour/Finish	White
Style	Contemporary
Ce Certified	Yes
Inner Bowl Height	125 mm
No. Of Tapholes	1
Number Of Bowls	1
Overflow Included	Yes
Tap Included	No
Waste Included	No

© ROXOR Group

Sales Code: URB892 **Barcode:** 5056462659701 **Brand:** Hudson Reed **Description:** Hudson Reed Urban 500mm Satin Green 2 Drawer Vanity Unit



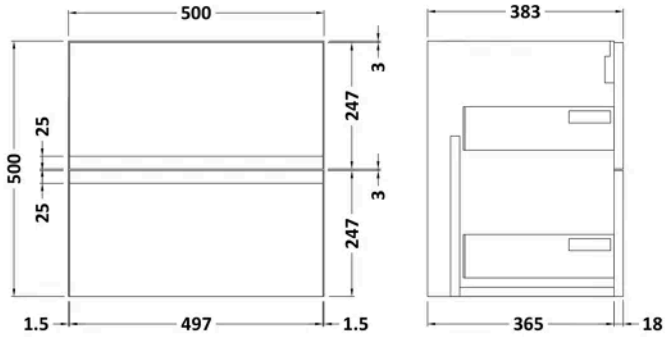

Product Dimensions

Product	500 x 510 x 383mm (H x W x D)
Packaged	500 x 495 x 383mm (H x W x D)
Nett Weight	18.5 kg
Packaged Weight	19 kg

Packaging Details

Box Qty	1

Product Details

Country of Origin	China
Product Material	Mdf Painted Matt
Colour/Finish	Satin Green
Style	Contemporary
Construction Method	Cam & Wood Dowel
Construction Type	Rigid
Fascia Finish	Mdf Painted Matt
Handles Included	No
Material Thickness	18 mm
No. Drawers	2

© ROXOR Group