**Sales Code:** URB304W2

**Barcode:** 5056462674759

**Brand:** Hudson Reed

**Description:** Hudson Reed Urban Satin Blue 1200mm 4 Drawer Wall Hung Vanity Unit With Co-ordinating Worktop



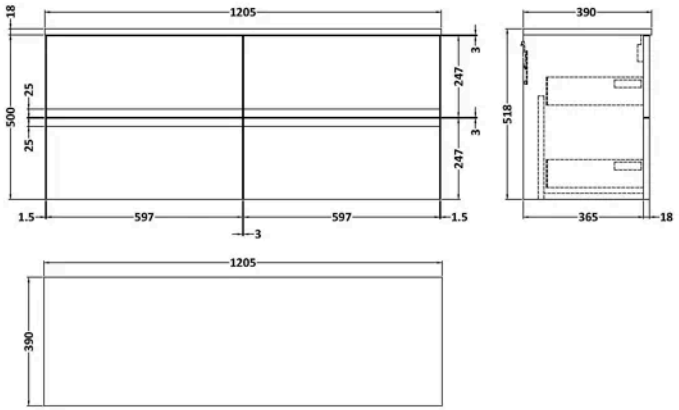


## Product Dimensions

| | |
|---|---|
| Product | 518 x 1205 x 390mm (H x W x D) |
| Nett Weight | 41.5 kg |
| Packaged Weight | 42 kg |

## Packaging Details

| | |
|---|---|
| Box Qty | 3 |

## Product Details

| | |
|---|---|
| Country of Origin | China |
| Product Material | Mfc Painted Matt |
| Colour/Finish | Satin Blue |
| Mount Type | Wall Hung |
| Style | Contemporary |
| Handle Type | Handleless |
| Construction Method | Cam & Wood Dowel |
| Construction Type | Rigid |
| Drawer Type | 80mm High Metal Soft-close |
| Fascia Finish | Mdf Painted Matt |
| Fsc Certified | Yes |
| Handles Included | No |
| Material Thickness | 18 mm |
| No. Drawers | 2 |
| Waste Shroud | Yes |

© ROXOR Group

**Sales Code:** MWT320 **Barcode:** 5056462654980 **Brand:** nuie **Description:** 1200mm Satin Blue MDF Matt Worktop



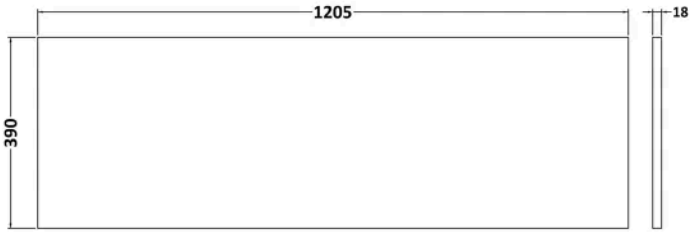


## Product Dimensions

| | |
|---|---|
| Product | 18 x 1205 x 390mm (H x W x D) |
| Packaged | 25 x 1225 x 410mm (H x W x D) |
| Nett Weight | 5 kg |
| Packaged Weight | 5 kg |

## Packaging Details

| | |
|---|---|
| Box Qty | 1 |

## Product Details

| | |
|---|---|
| Country of Origin | China |
| Product Material | Mdf Painted Matt |
| Colour/Finish | Satin Blue |
| Style | Contemporary |

© ROXOR Group

**Sales Code:** URB393 **Barcode:** 5056211890478 **Brand:** Hudson Reed **Description:** Hudson Reed Urban 600mm Azzure Blue 2 Drawer Wall Hung Vanity Unit

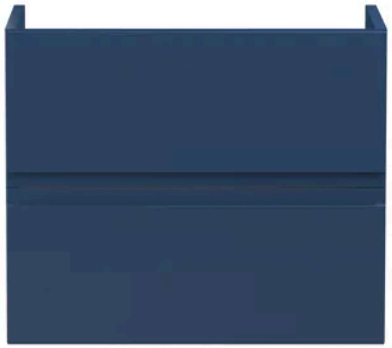

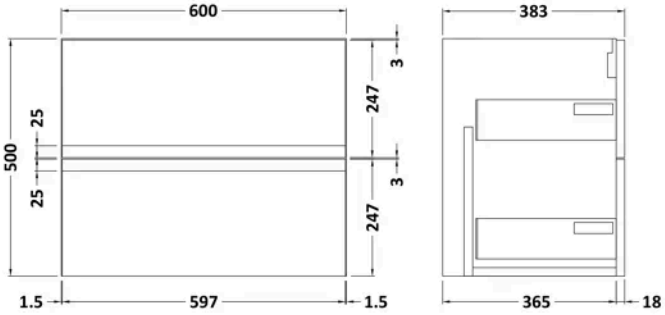


## Product Dimensions

| | |
|---|---|
| Product | 500 x 610 x 383mm (H x W x D) |
| Packaged | 500 x 595 x 383mm (H x W x D) |
| Nett Weight | 18.5 kg |
| Packaged Weight | 19 kg |

## Packaging Details

| | |
|---|---|
| Box Qty | 1 |

## Product Details

| | |
|---|---|
| Country of Origin | China |
| Product Material | Mdf Painted Matt |
| Colour/Finish | Azzure Blue |
| Mount Type | Wall Hung |
| Style | Contemporary |
| Construction Method | Cam & Wood Dowel |
| Construction Type | Rigid |
| Fascia Finish | Mdf Painted Matt |
| Handles Included | No |
| Material Thickness | 18 mm |
| No. Drawers | 2 |

© ROXOR Group