Sales Code: URB304LSB2 **Barcode:** 5056678460108 **Brand:** Hudson Reed **Description:** Hudson Reed Urban 1200mm Wall Hung 4-Drawer Unit With Laminate Worktop

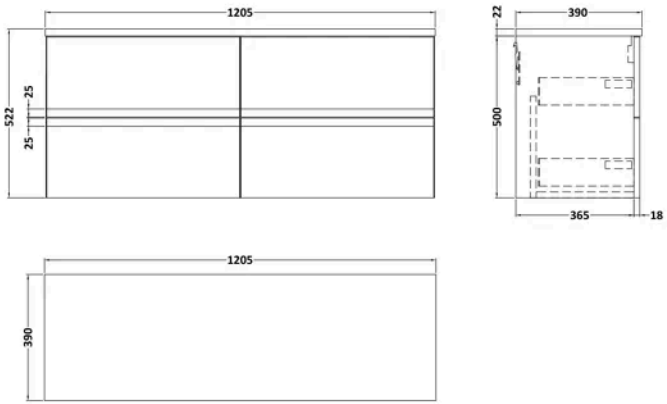

Product Dimensions

Product	522 x 1205 x 390mm (H x W x D)
Packaged	500 x 1200 x 383mm (H x W x D)
Nett Weight	43 kg
Packaged Weight	43 kg

Product Details

Country of Origin	China
Product Material	Mfc Painted Matt
Colour/Finish	Satin Blue
Mount Type	Wall Hung
Style	Contemporary
Handle Type	Handleless
Construction Method	Cam & Wood Dowel
Construction Type	Rigid
Drawer Type	80mm High Metal Soft-close
Fascia Finish	Mfc Painted Matt
Fsc Certified	Yes
Handles Included	No
Material Thickness	18 mm
No. Drawers	2
Waste Shroud	Yes

© ROXOR Group

Sales Code: LSB1200 **Barcode:** 5056678449929 **Brand:** nuie **Description:** Laminate Worktop 1205x390x22mm

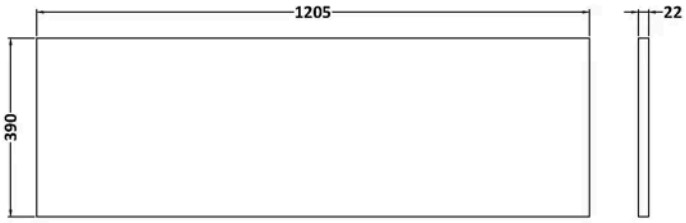

Product Dimensions

Product	22 x 1205 x 390mm (H x W x D)
Packaged	25 x 1215 x 455mm (H x W x D)
Nett Weight	5 kg
Packaged Weight	5 kg

Product Details

Country of Origin	United Kingdom
Product Material	Mfc Laminated
Colour/Finish	Black
Style	Contemporary

© ROXOR Group

Sales Code: URB393 **Barcode:** 5056211890478 **Brand:** Hudson Reed **Description:** Hudson Reed Urban 600mm Azzure Blue 2 Drawer Wall Hung Vanity Unit

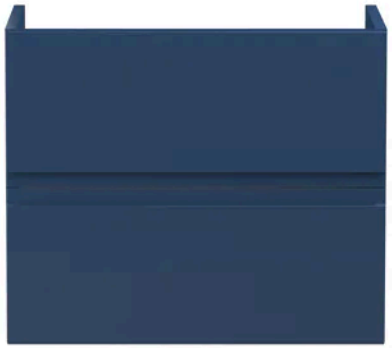

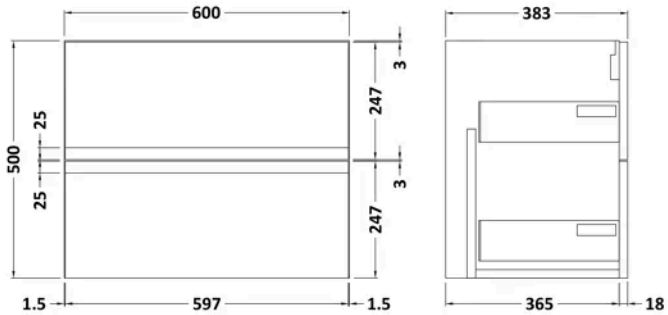

Product Dimensions

Product	500 x 610 x 383mm (H x W x D)
Packaged	500 x 595 x 383mm (H x W x D)
Nett Weight	18.5 kg
Packaged Weight	19 kg

Product Details

Country of Origin	China
Product Material	Mdf Painted Matt
Colour/Finish	Azzure Blue
Mount Type	Wall Hung
Style	Contemporary
Construction Method	Cam & Wood Dowel
Construction Type	Rigid
Fascia Finish	Mdf Painted Matt
Handles Included	No
Material Thickness	18 mm
No. Drawers	2

© ROXOR Group