Sales Code: URB304G

Barcode: 5056462622293

Brand: Hudson Reed

Description: Hudson Reed Urban Satin Blue 600mm 2 Drawer Wall Hung Vanity Unit With U-Shaped Curved Basin



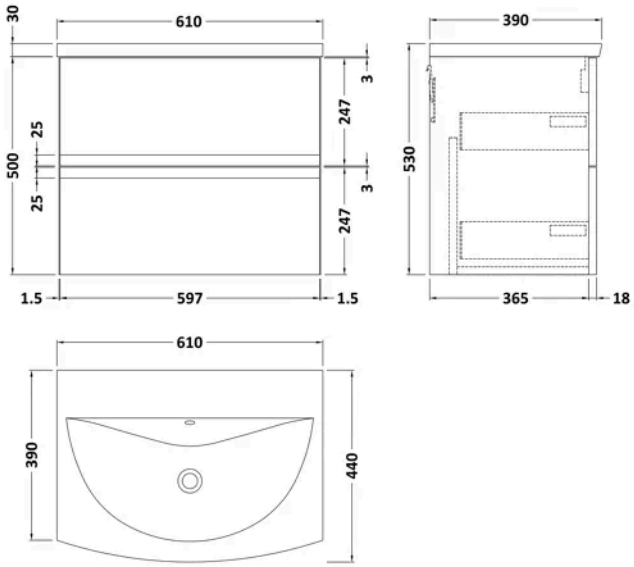

Product Dimensions

Product	530 x 610 x 440mm (H x W x D)
Nett Weight	29 kg
Packaged Weight	29.5 kg

Packaging Details

Box Qty	2

Product Details

Country of Origin	China
Product Material	Mfc Painted Matt
Colour/Finish	Satin Blue
Mount Type	Wall Hung
Style	Contemporary
Handle Type	Handleless
Construction Method	Cam & Wood Dowel
Construction Type	Rigid
Drawer Type	80mm High Metal Soft-close
Fascia Finish	Mdf Painted Matt
Fsc Certified	Yes
Handles Included	No
Inner Bowl Height	125 mm
Leg Set Included	No
Material Thickness	18 mm
No. Drawers	2
No. Of Tapholes	1
Number Of Bowls	1
Overflow Included	Yes
Tap Included	No
Waste Included	No
Waste Shroud	Yes

© ROXOR Group

Sales Code: NVM043 **Barcode:** 5056462620961 **Brand:** nuie **Description:** 1 Tap Hole 600mm Curved Ceramic Basin



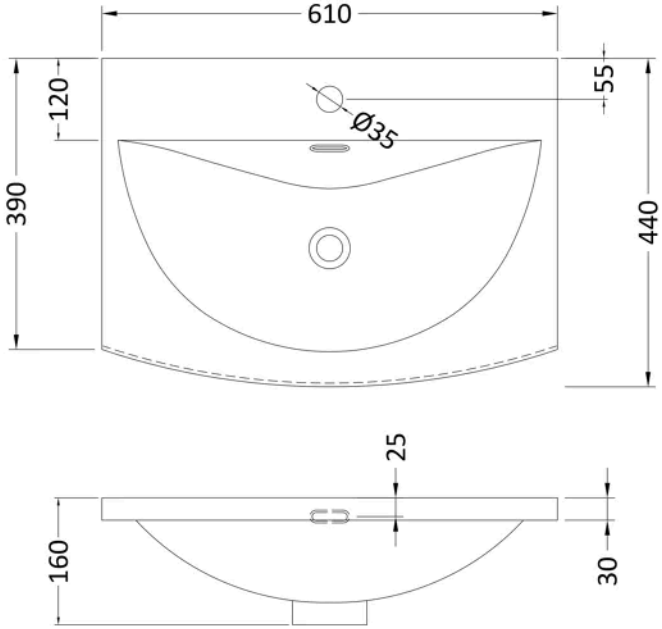

Product Dimensions

Product	160 x 610 x 440mm (H x W x D)
Packaged	190 x 630 x 415mm (H x W x D)
Nett Weight	11 kg
Packaged Weight	11.5 kg

Packaging Details

Box Qty	1

Product Details

Country of Origin	China
Product Material	Vitreous China
Colour/Finish	White
Style	Contemporary
Ce Certified	Yes
Inner Bowl Height	125 mm
No. Of Tapholes	1
Number Of Bowls	1
Overflow Included	Yes
Tap Included	No
Waste Included	No

© ROXOR Group

Sales Code: URB393 **Barcode:** 5056211890478 **Brand:** Hudson Reed **Description:** Hudson Reed Urban 600mm Azzure Blue 2 Drawer Wall Hung Vanity Unit

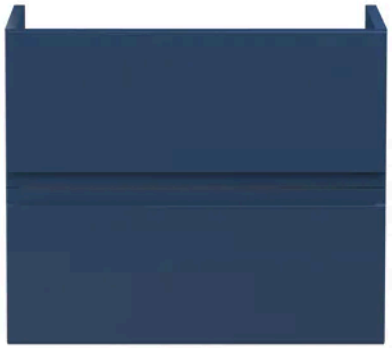

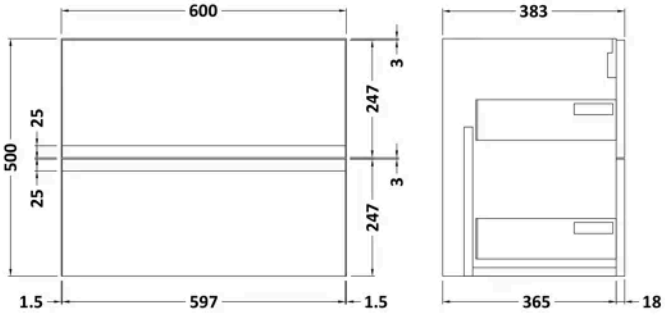

Product Dimensions

Product	500 x 610 x 383mm (H x W x D)
Packaged	500 x 595 x 383mm (H x W x D)
Nett Weight	18.5 kg
Packaged Weight	19 kg

Packaging Details

Box Qty	1

Product Details

Country of Origin	China
Product Material	Mdf Painted Matt
Colour/Finish	Azzure Blue
Mount Type	Wall Hung
Style	Contemporary
Construction Method	Cam & Wood Dowel
Construction Type	Rigid
Fascia Finish	Mdf Painted Matt
Handles Included	No
Material Thickness	18 mm
No. Drawers	2

© ROXOR Group