**Sales Code:** URB205B

**Barcode:** 5056211892649

**Brand:** Hudson Reed

**Description:** Hudson Reed Urban Satin Grey 800mm 2 Door 1 Drawer Floor Standing Vanity Unit With Minimalist Basin



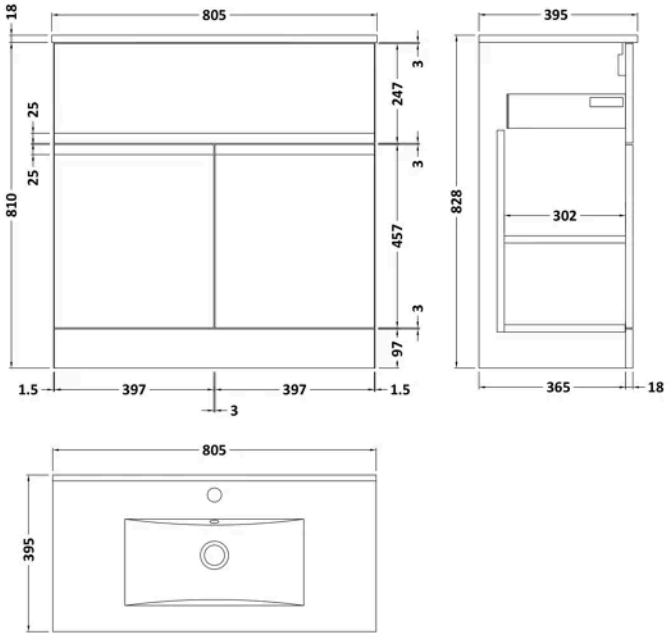


## Product Dimensions

| | |
|---|---|
| Product | 828 x 805 x 395mm (H x W x D) |
| Packaged | 550 x 550 x 550mm (H x W x D) |
| Nett Weight | 44.74 kg |
| Packaged Weight | 45.24 kg |

## Packaging Details

| | |
|---|---|
| Box Qty | 2 |

## Product Details

| | |
|---|---|
| Country of Origin | China |
| Product Material | Mfc Painted Matt |
| Colour/Finish | Satin Grey |
| Mount Type | Floor |
| Style | Contemporary |
| Handle Type | Handleless |
| Construction Method | Cam & Wood Dowel |
| Construction Type | Rigid |
| Drawer Type | 80mm High Metal Soft-close |
| Fascia Finish | Mdf Painted Matt |
| Fsc Certified | Yes |
| Handles Included | No |
| Inner Bowl Height | 125 mm |
| Leg Set Included | No |
| Material Thickness | 18 mm |
| No. Doors | 2 |
| No. Drawers | 1 |
| No. Of Tapholes | 1 |
| No. Shelves | 1 |
| Number Of Bowls | 1 |
| Number Of Shelves | 1 |
| Overflow Included | Yes |
| Tap Included | No |
| Waste Included | No |
| Waste Shroud | Yes |

© ROXOR Group

**Sales Code:** NVM005 **Barcode:** 5055146194675 **Brand:** nuie **Description:** 1 Tap Hole 800mm Minimalist Ceramic Basin



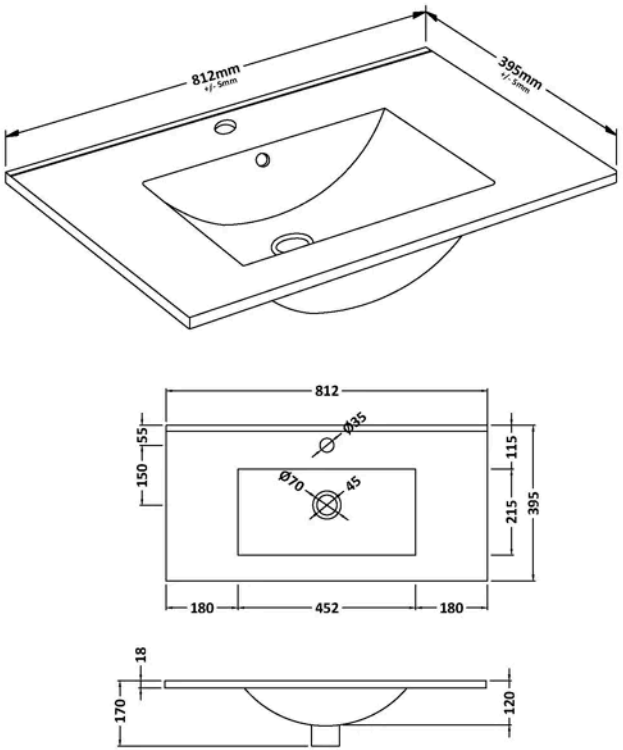


## Product Dimensions

| | |
|---|---|
| Product | 170 x 812 x 395mm (H x W x D) |
| Packaged | 400 x 820 x 200mm (H x W x D) |
| Nett Weight | 13.74 kg |
| Packaged Weight | 15 kg |

## Packaging Details

| | |
|---|---|
| Box Qty | 1 |

## Product Details

| | |
|---|---|
| Country of Origin | China |
| Product Material | Vitreous China |
| Colour/Finish | White |
| Style | Contemporary |
| Ce Certified | Yes |
| Inner Bowl Height | 125 mm |
| No. Of Tapholes | 1 |
| Number Of Bowls | 1 |
| Overflow Included | Yes |
| Tap Included | No |
| Waste Included | No |

© ROXOR Group

**Sales Code:** URB228 **Barcode:** 5056211890492 **Brand:** Hudson Reed **Description:** Hudson Reed Urban 800mm Satin Grey 2 Door 1 Drawer Floor Standing Vanity Unit



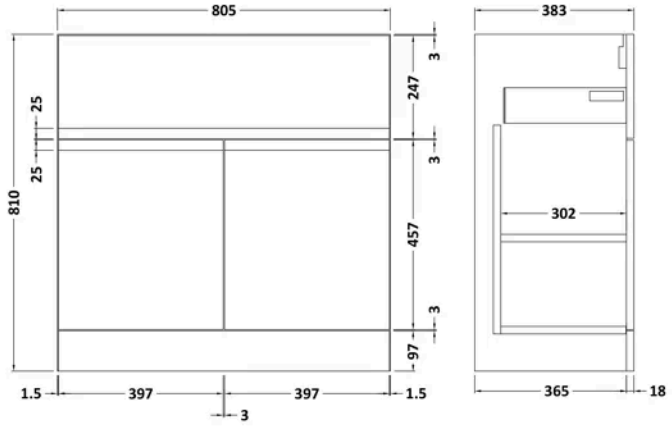


## Product Dimensions

| | |
|---|---|
| Product | 810 x 810 x 383mm (H x W x D) |
| Packaged | 780 x 795 x 383mm (H x W x D) |
| Nett Weight | 31.5 kg |
| Packaged Weight | 32 kg |

## Packaging Details

| | |
|---|---|
| Box Qty | 1 |

## Product Details

| | |
|---|---|
| Country of Origin | China |
| Product Material | Mdf Painted Matt |
| Colour/Finish | Satin Grey |
| Style | Contemporary |
| Construction Method | Cam & Wood Dowel |
| Construction Type | Rigid |
| Fascia Finish | Mdf Painted Matt |
| Handles Included | No |
| Material Thickness | 18 mm |
| No. Doors | 2 |
| No. Drawers | 1 |

© ROXOR Group