Sales Code: URB1404W

Barcode: 5056678415924

Brand: Hudson Reed

Description: Hudson Reed Urban Soft Black 600mm 2 Drawer Wall Hung Vanity Unit With Co-ordinating Worktop



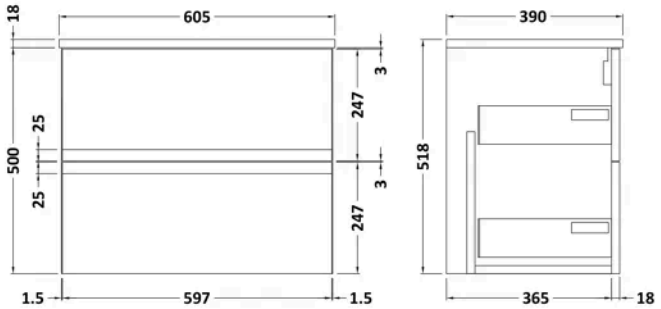

Product Dimensions

Product	518 x 610 x 390mm (H x W x D)
Packaged	550 x 550 x 550mm (H x W x D)
Nett Weight	20 kg
Packaged Weight	20.5 kg

Packaging Details

Box Qty	2

Product Details

Country of Origin	China
Product Material	Mfc Painted Matt
Colour/Finish	Soft Black
Mount Type	Wall Hung
Style	Contemporary
Handle Type	Handleless
Construction Method	Cam & Wood Dowel
Construction Type	Rigid
Drawer Type	80mm High Metal Soft-close
Fascia Finish	Mfc Painted Matt
Fsc Certified	Yes
Handles Included	No
Material Thickness	18 mm
No. Drawers	2
Waste Shroud	Yes

© ROXOR Group

Sales Code: MWT1460 **Barcode:** 5056462661285 **Brand:** nuie **Description:** 600mm Satin Soft Black Matt Worktop

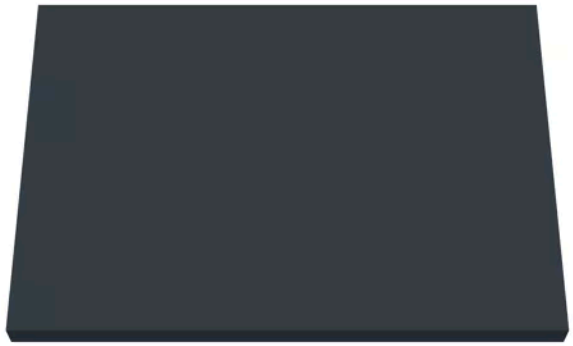

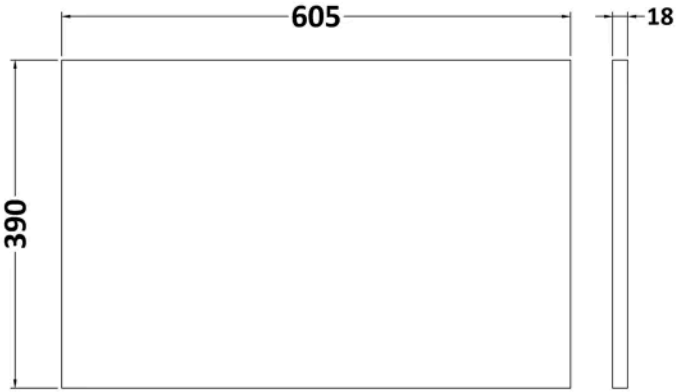

Product Dimensions

Product	18 x 605 x 390mm (H x W x D)
Packaged	25 x 625 x 410mm (H x W x D)
Nett Weight	2 kg
Packaged Weight	2.5 kg

Packaging Details

Box Qty	1

Product Details

Country of Origin	China
Product Material	Mdf Painted Matt
Colour/Finish	Soft Black
Style	Contemporary

© ROXOR Group

Sales Code: URB1493 **Barcode:** 5056678402863 **Brand:** Hudson Reed **Description:** Hudson Reed Urban 600mm Gloss Grey 2 Drawer Vanity Unit



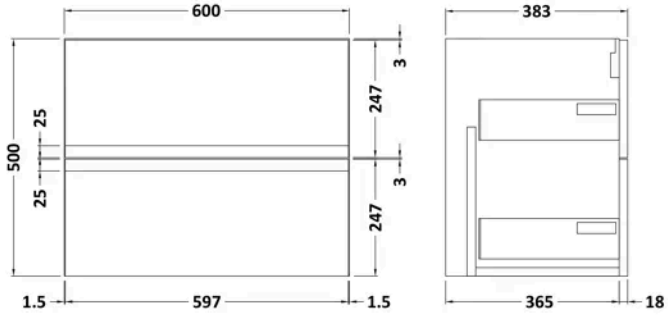

Product Dimensions

Product	500 x 610 x 383mm (H x W x D)
Packaged	500 x 595 x 383mm (H x W x D)
Nett Weight	18.5 kg
Packaged Weight	19 kg

Packaging Details

Box Qty	1

Product Details

Country of Origin	China
Product Material	Mfc Painted Gloss
Colour/Finish	Gloss Grey
Style	Contemporary
Construction Method	Cam & Wood Dowel
Construction Type	Rigid
Fascia Finish	Mfc Painted Gloss
Handles Included	No
Material Thickness	18 mm
No. Drawers	2

© ROXOR Group