Sales Code: URB1404LCM

Barcode: 5056678456217

Brand: Hudson Reed

Description: Hudson Reed Urban Soft Black 600mm 2 Drawer Wall Hung Vanity Unit With Carrara Laminate Worktop



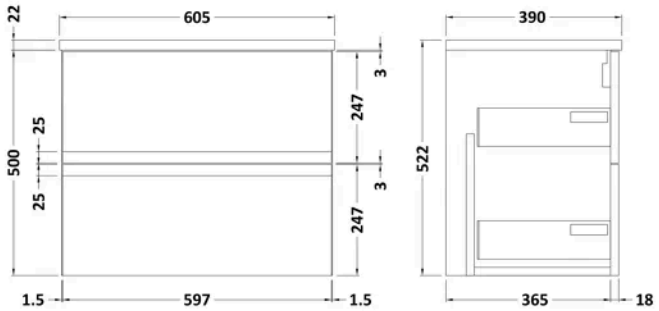

Product Dimensions

Product	522 x 610 x 390mm (H x W x D)
Nett Weight	20 kg
Packaged Weight	20.5 kg

Packaging Details

Box Qty	2

Product Details

Country of Origin	China
Product Material	Mfc Painted Matt
Colour/Finish	Soft Black
Mount Type	Wall Hung
Style	Contemporary
Handle Type	Handleless
Construction Method	Cam & Wood Dowel
Construction Type	Rigid
Drawer Type	80mm High Metal Soft-close
Fascia Finish	Mfc Painted Matt
Fsc Certified	Yes
Handles Included	No
Material Thickness	18 mm
No. Drawers	2
Waste Shroud	Yes

© ROXOR Group

Sales Code: LCM600 **Barcode:** 5056462624433 **Brand:** nuie **Description:** 605 x 390mm Carrera Marble Laminate Worktop

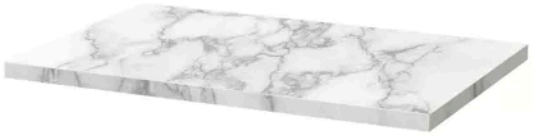

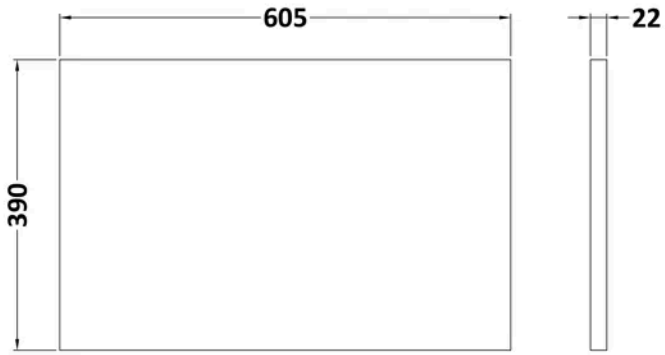

Product Dimensions

Product	22 x 605 x 390mm (H x W x D)
Packaged	25 x 610 x 455mm (H x W x D)
Nett Weight	2 kg
Packaged Weight	2 kg

Packaging Details

Box Qty	1

Product Details

Country of Origin	United Kingdom
Product Material	Mfc Laminated
Colour/Finish	Carrera Marble
Style	Contemporary

© ROXOR Group

Sales Code: URB1493 **Barcode:** 5056678402863 **Brand:** Hudson Reed **Description:** Hudson Reed Urban 600mm Gloss Grey 2 Drawer Vanity Unit



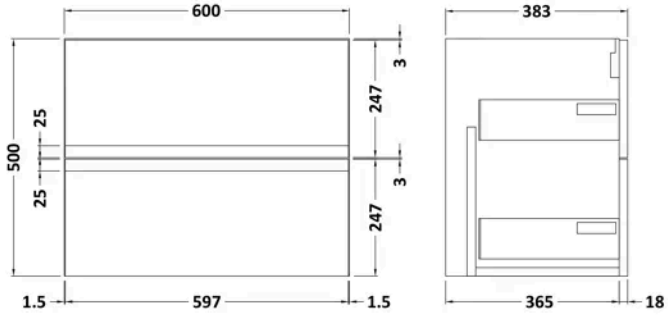

Product Dimensions

Product	500 x 610 x 383mm (H x W x D)
Packaged	500 x 595 x 383mm (H x W x D)
Nett Weight	18.5 kg
Packaged Weight	19 kg

Packaging Details

Box Qty	1

Product Details

Country of Origin	China
Product Material	Mfc Painted Gloss
Colour/Finish	Gloss Grey
Style	Contemporary
Construction Method	Cam & Wood Dowel
Construction Type	Rigid
Fascia Finish	Mfc Painted Gloss
Handles Included	No
Material Thickness	18 mm
No. Drawers	2

© ROXOR Group